Electrical Enclosure Accessories IP-SSPMP

STAINLESS STEEL | U-CHANNEL PROFILES Suited for Electrical Enclosures

IP Enclosures stainless steel U-Channel Profile Mounting Rails are structural mounting members engineered for pole-mounted electrical enclosure installations. They are designed to interface with pole mounting brackets. The U-profile rail provides high mechanical strength, effective load distribution, and adjustable fixing locations for secure attachment to utility poles and column structures. The reinforced channel section offers excellent resistance to bending and torsional stresses, ensuring long-term stability and reliability in demanding outdoor electrical, telecommunications, and infrastructure installations.

Material:
- Body: 2.0mm Grade 316 stainless steel.



Image shown is for reference only.
See the table below for accurate sizes and specifications.

Part Number	Size	Description	Weight
SKU	H x L (mm)		Kilogram (Kg)
IP-SSPMP200	52mmH x 200mmL	U-Channel Profile 200mm Long - 316 Stainless Steel	0.5
IP-SSPMP300	52mmH x 300mmL	U-Channel Profile 300mm Long - 316 Stainless Steel	0.7
IP-SSPMP400	52mmH x 400mmL	U-Channel Profile 400mm Long - 316 Stainless Steel	1
IP-SSPMP500	52mmH x 500mmL	U-Channel Profile 500mm Long - 316 Stainless Steel	1.2
IP-SSPMP600	52mmH x 600mmL	U-Channel Profile 600mm Long - 316 Stainless Steel	1.4

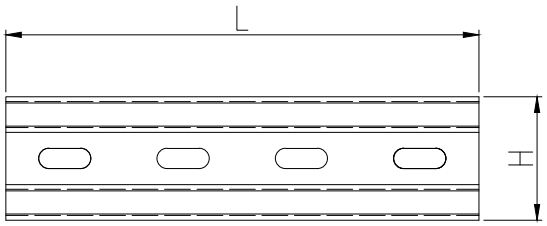

FRONT VIEW

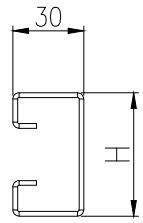

SIDE VIEW

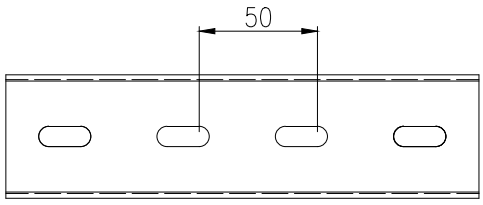

REAR VIEW

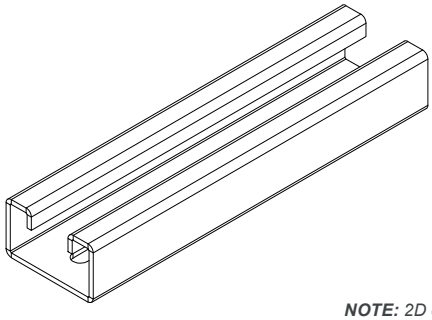

NOTE: *2D drawing is for reference only.*
See CAD files for sizes and specifications.

© IP Enclosures 2026