RevNo	Revision note	Date	Signature	Checked
	GENERAL REVISION		IP	IP

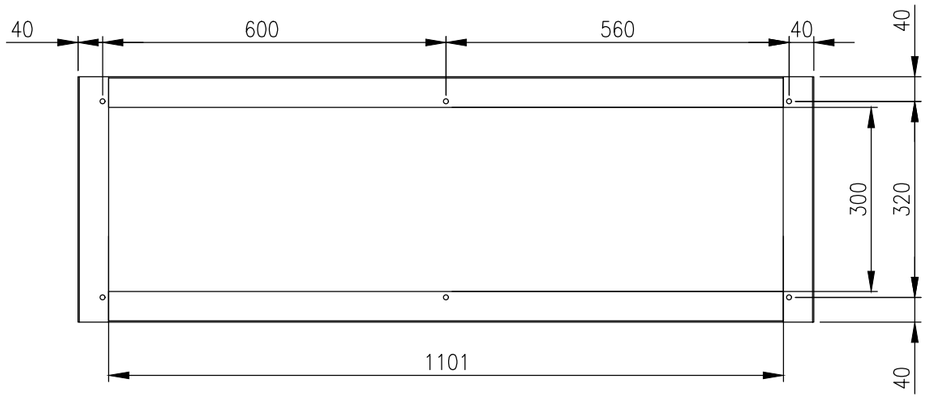

TOP VIEW

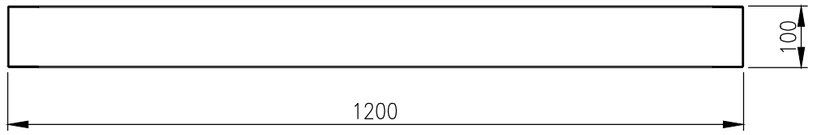

FRONT VIEW

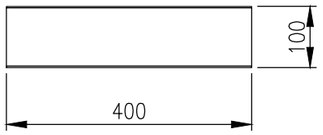

SIDE VIEW

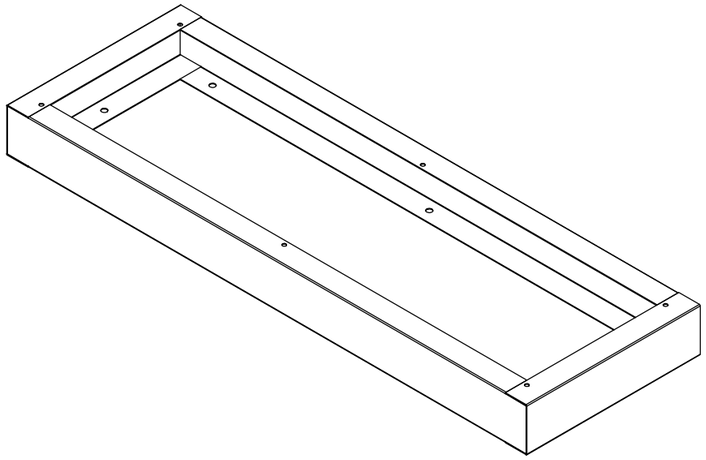

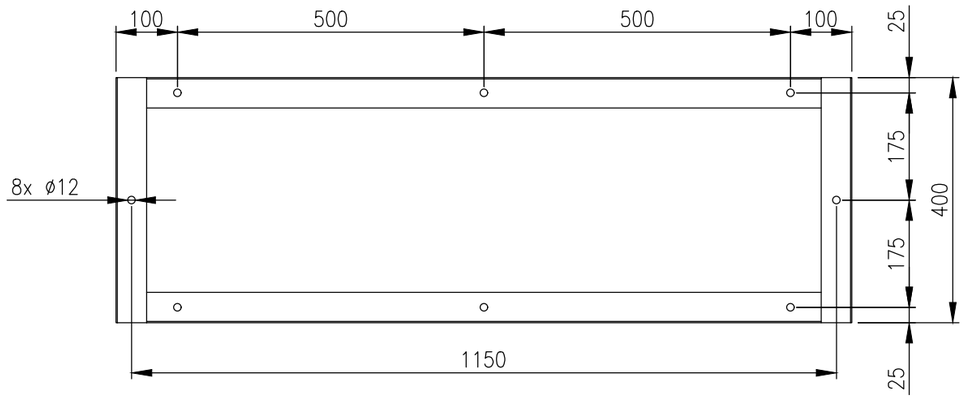

BOTTOM VIEW

MATERIAL:
BODY: 2.0mm GRADE 316L STAINLESS STEEL

MASS: 7.0Kg.

© IP ENCLOSURES 2026.
THIS DRAWING SHALL NOT BE COPIED OR REPRODUCED
WITHOUT AUTHORISATION FROM IP ENCLOSURES.
www.ipenclosures.com.au

Itemref	Quantity	Title/Name, designation, material, dimension etc			Article No./Reference
Designed by IP		Checked by IP	Approved by - date 31/07/26	Filename IP-SSPLINTH12040	Date 31/07/26	Scale 1:10

Enclosures

1200Wx400D STAINLESS STEEL PLINTH

IP-SSPLINTH12040

Edition 0

Sheet 1/1