RevNo	Revision note	Date	Signature	Checked
0	GENERAL REVISION		IP	IP

FRONT VIEW

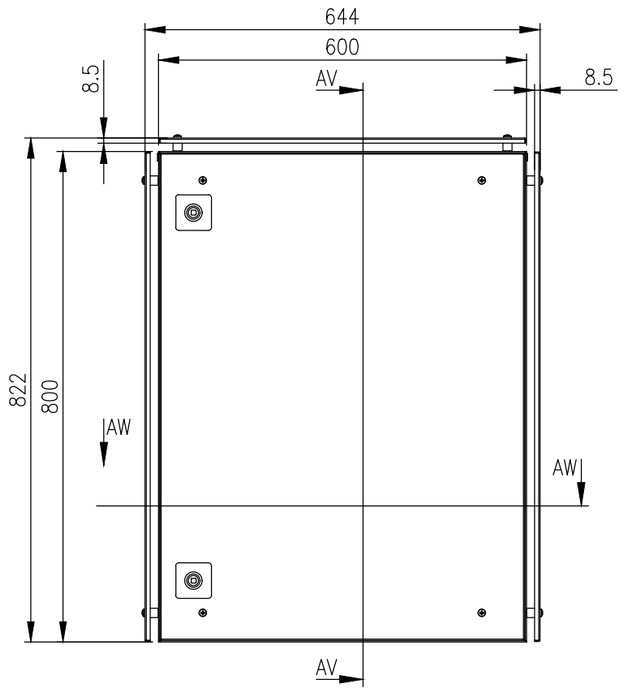

FRONT VIEW

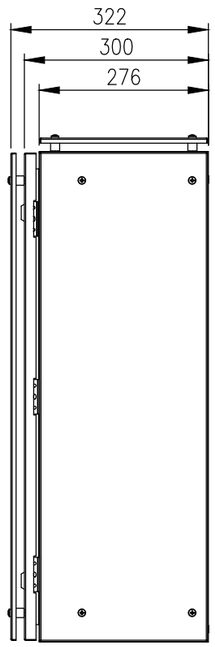

RIGHT SIDE VIEW

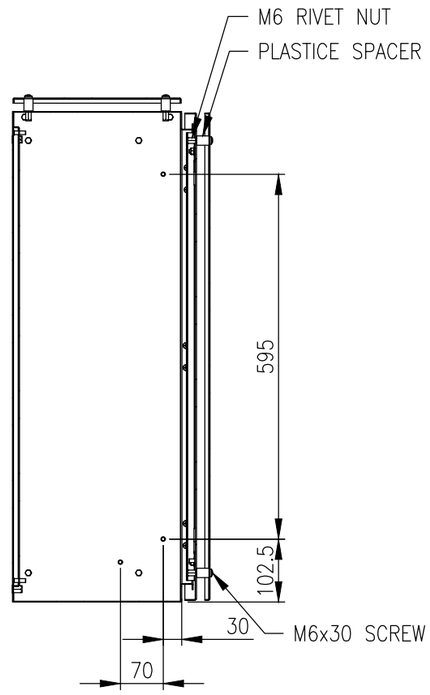

SECTION AV–AV

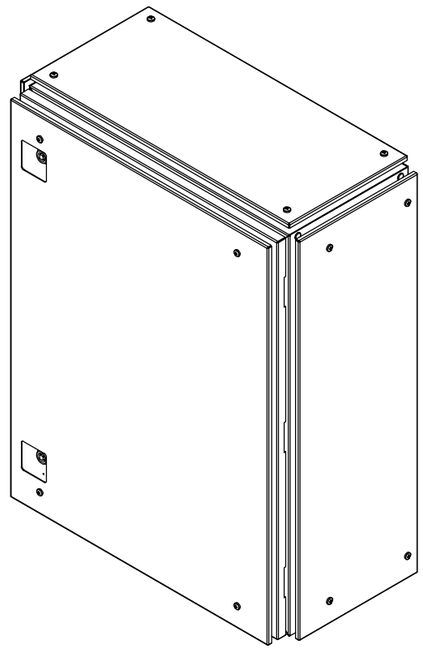

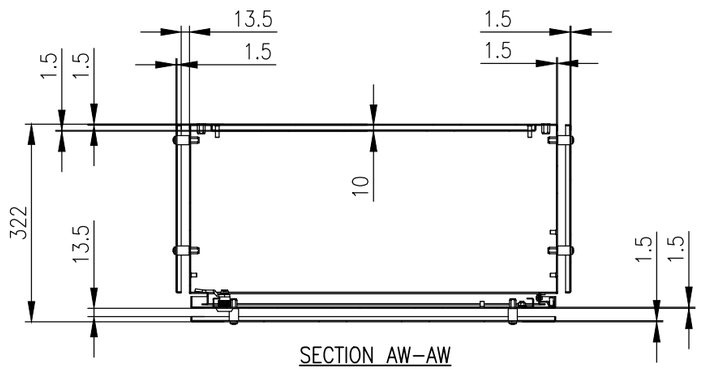

SECTION AW–AW

MATERIAL
BODY: 1.5mm GRADE 316L STAINLESS STEEL
DOOR: 1.5mm GRADE 316L STAINLESS STEEL
SUN SHIELDS: 1.5mm GRADE 316L STAINLESS STEEL
with STAINLESS STEEL FASTENERS
DEVICE PLATE: 1.5mm GALVANISED STEEL SHEET
SEAL: POLYURETHANE

MASS: 42.8Kg.

PROTECTION: IP66 IK10 (NEMA 4x)
STANDARD: IEC/EN62208, IEC/EN/AS60529

© IP ENCLOSURES 2025.
THIS DRAWING SHALL NOT BE COPIED OR REPRODUCED
WITHOUT AUTHORISATION FROM IP ENCLOSURES.
www.ipenclosures.com.au

Itemref	Quantity	Title/Name, designation, material, dimension etc			Article No./Reference	
Designed by IP		Checked by IP	Approved by - date 19/03/25	Filename IP-SS806030SUN	Date 19/03/25	Scale 1:10
IP Enclosures		800x600x300 316SS ELECTRICAL ENCLOSURE with SUNSHIELDS				
		IP-SS806030SUN			Edition 0	Sheet 1/1