RevNo	Revision note	Date	Signature	Checked
	GENERAL REVISION		IP	IP

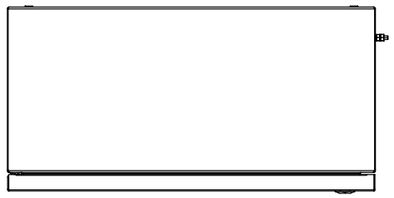

TOP VIEW

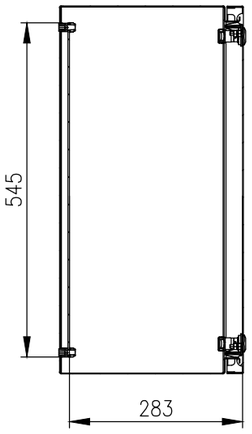

SECTION A–A

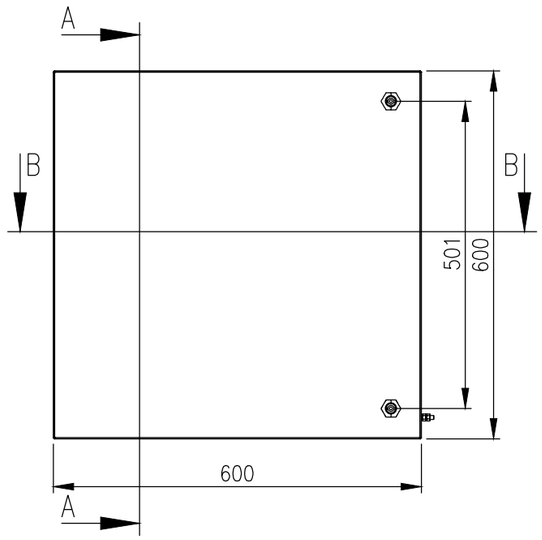

FRONT VIEW

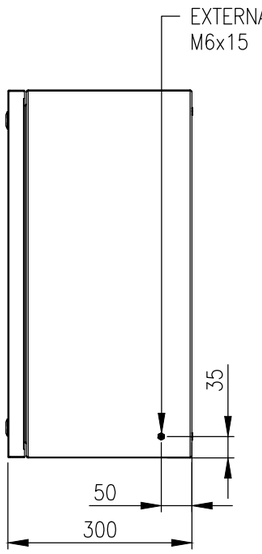

RIGHT SIDE VIEW

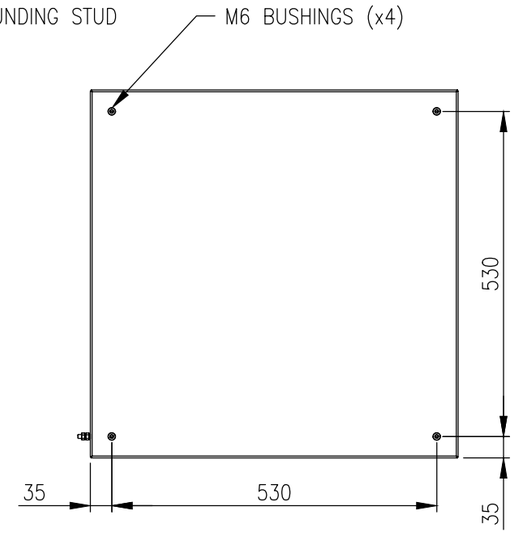

REAR VIEW

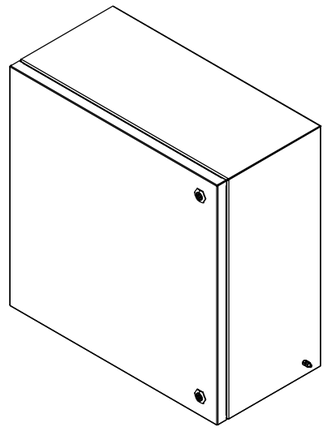

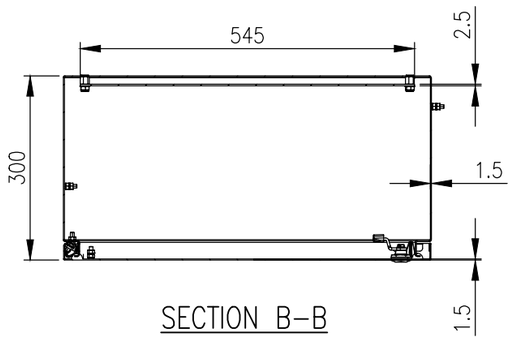

SECTION B–B

MATERIAL:
BODY: 1.2mm GRADE 316L STAINLESS STEEL
DOOR: 1.5mm GRADE 316L STAINLESS STEEL
INTERNAL MOUNTING PLATE: 2.5mm STEEL SHEET
SEAL: POLYURETHANE

PROTECTION: IP66 IK10, NEMA Type 1, 12, 4, 4x

STANDARD: CE, UKCA, UL508A, IECEx

MASS: 27Kg.

© IP ENCLOSURES 2026.
THIS DRAWING SHALL NOT BE COPIED OR REPRODUCED
WITHOUT AUTHORISATION FROM IP ENCLOSURES.
www.ipenclosures.com.au

Itemref	Quantity	Title/Name, designation, material, dimension etc			Article No./Reference	
Designed by: IP		Checked by: IP	Approved by - date: 28/08/26	Filename: IP-SS606030EX	Date: 28/08/26	Scale: 1:10
Enclosures		600x600x300 316SS ENCLOSURE				
		IP-SS606030EX			Edition: 0	Sheet: 1/1