| RevNo | Revision note | Date | Signature | Checked |
|---|---|---|---|---|
| 2 | GENERAL REVISION | 9/7/19 | IP | IP |

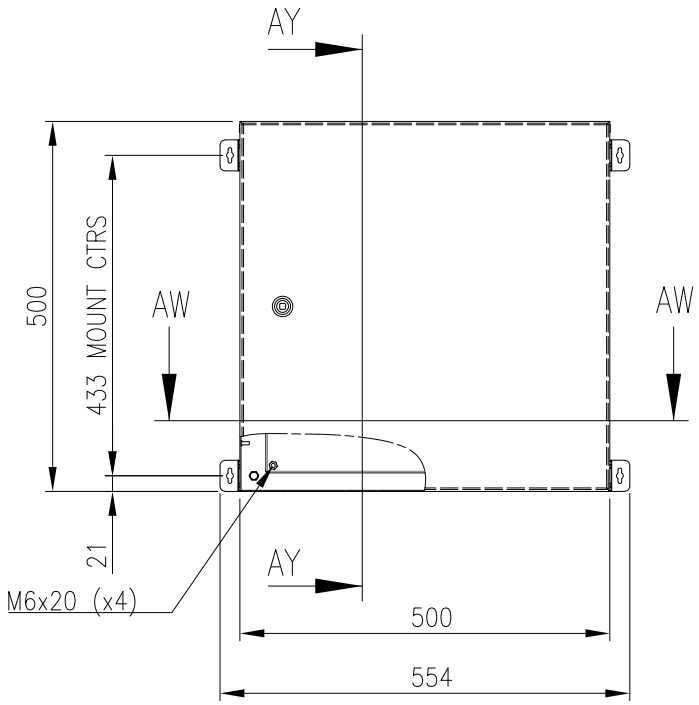


FRONT VIEW

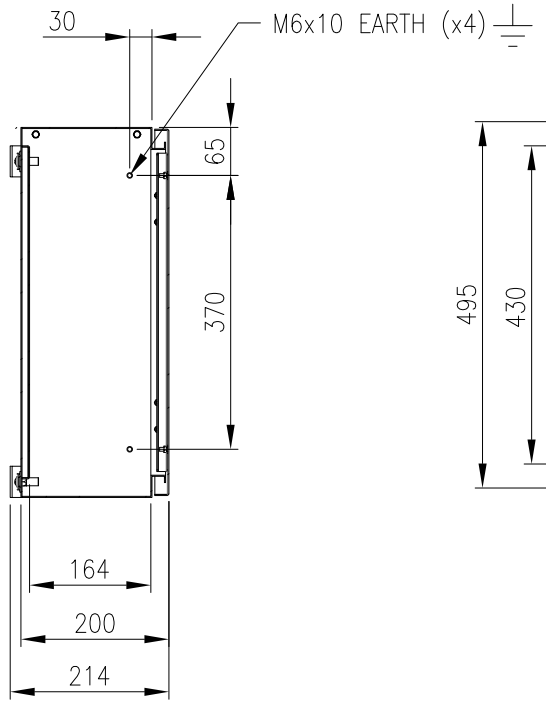


SECTION AY–AY

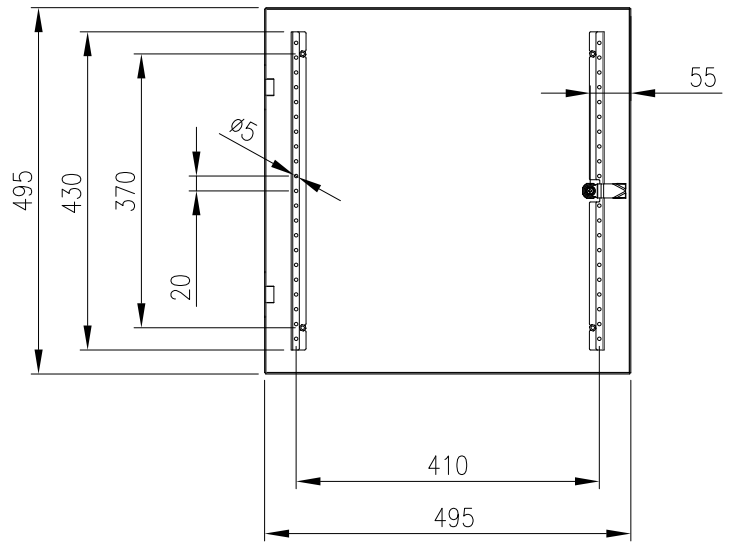


INSIDE DOOR VIEW

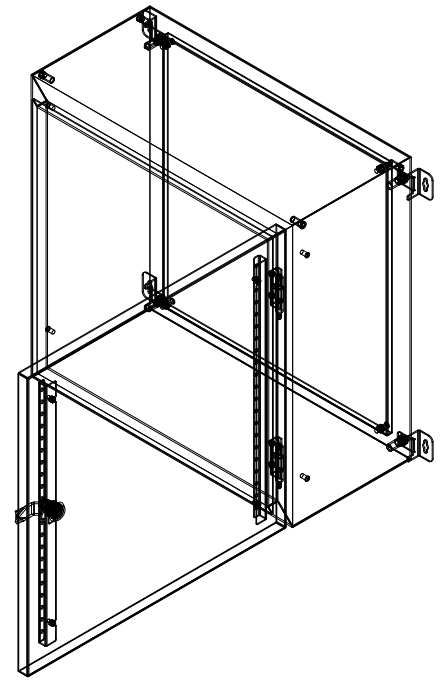

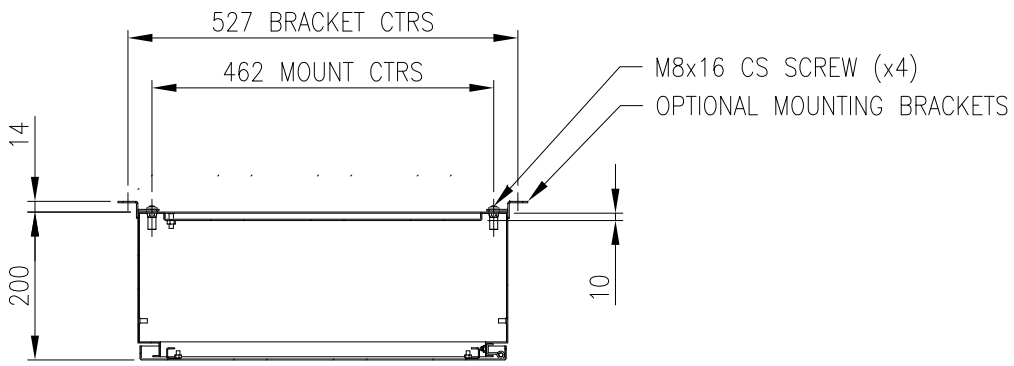


SECTION AW–AW

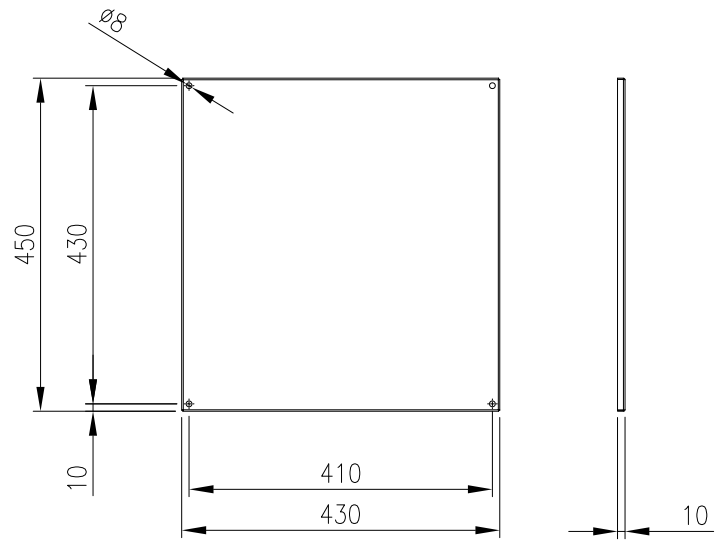


DEVICE MOUNTING PLATE

MATERIAL
BODY: 1.5mm 316 STAINLESS STEEL
DOOR: 1.5mm 316 STAINLESS STEEL
DEVICE PLATE: 1.5mm GALV STEEL
SEAL: POLYURETHANE

MASS: 15kg

PROTECTION: IP66 IK10, NEMA4x
STANDARD: IEC62208, IEC/EN/AS60529

© IP ENCLOSURES 2016.
THIS DRAWING SHALL NOT BE COPIED OR REPRODUCED
WITHOUT AUTHORISATION FROM IP ENCLOSURES.
www.ipenclosures.com.au

| Itemref | Quantity | Title/Name, designation, material, dimension etc | | Article No./Reference | |
|---|---|---|---|---|---|
| Designed by IP | | Checked by IP | Approved by - date 17/10/16 | Filename IP–SS505020–01 | Date 17/10/16 | Scale 1:10 |
| IP Enclosures | | 500x500x200 316SS ENCLOSURE | | | |
| | | IP–SS505020–01 | | Edition 2 | Sheet 1/1 |