RevNo	Revision note	Date	Signature	Checked
0	GENERAL REVISION		IP	IP

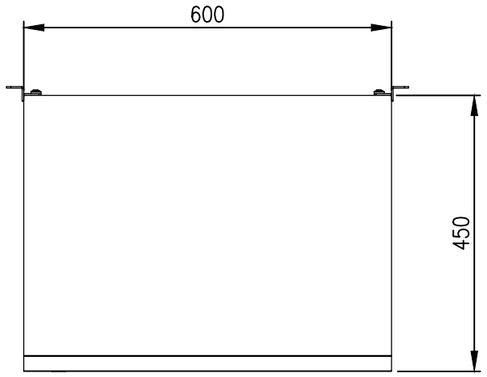

PLAN

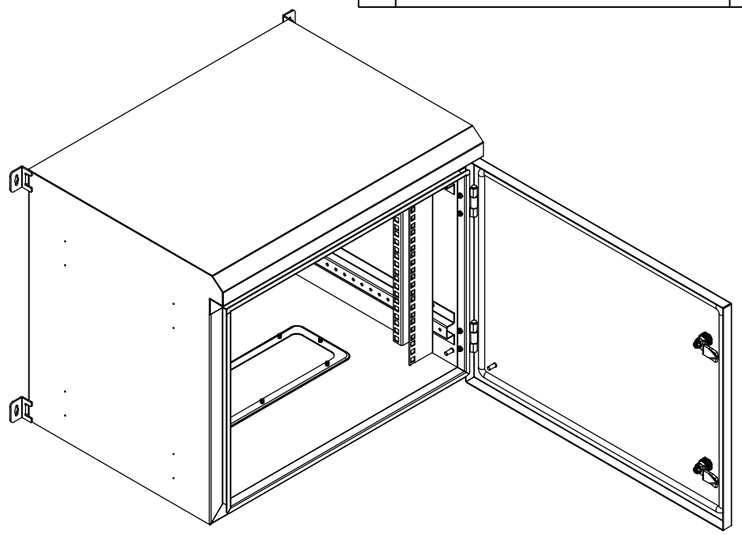

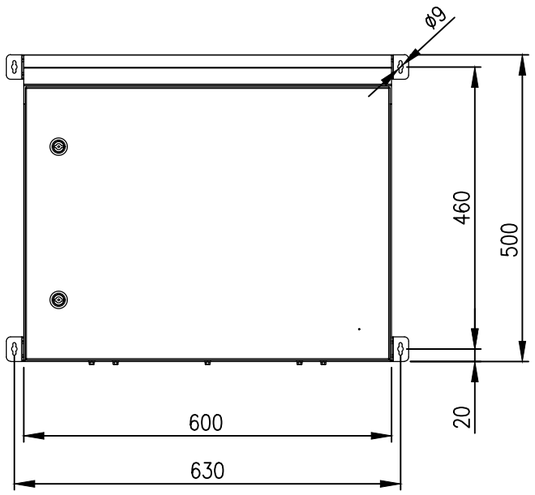

FRONT VIEW

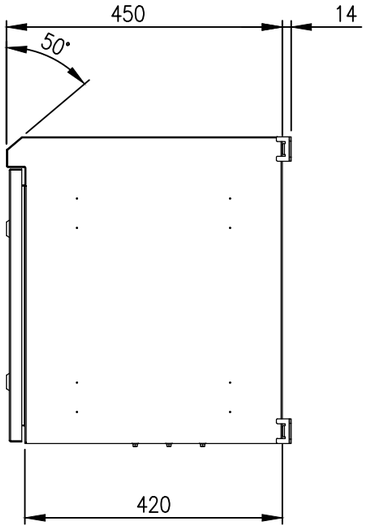

SIDE VIEW

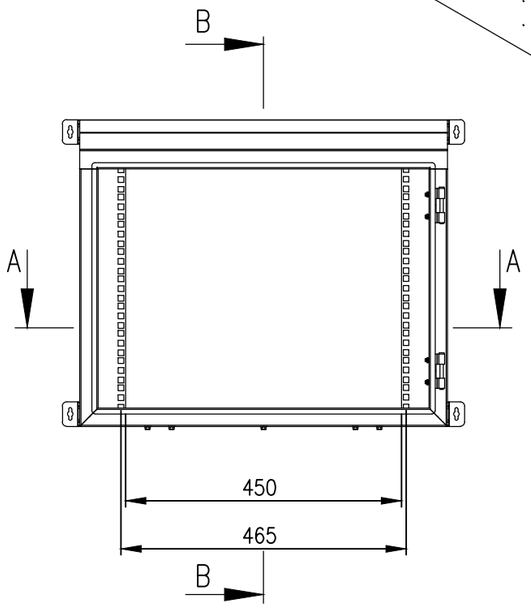

FRONT VIEW – DOOR REMOVED

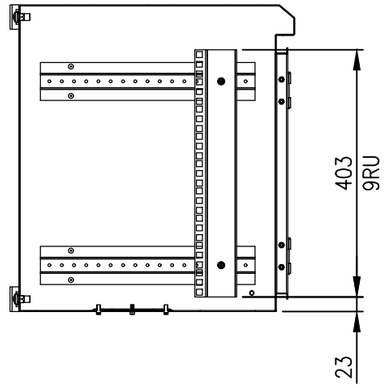

SECTION BB

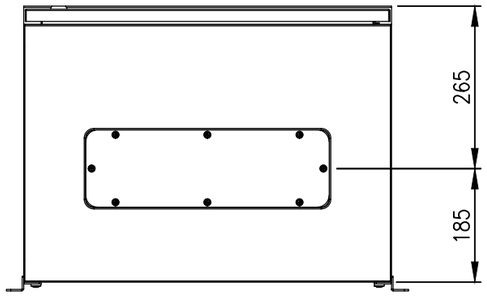

BOTTOM VIEW

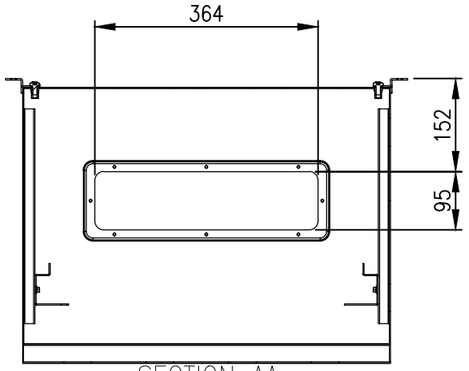

SECTION AA

MATERIAL
BODY: 1.5mm GALVANISED STEEL SHEET
DOOR: 1.5mm GALVANISED STEEL SHEET
19" RAILS: 1.5mm GALVANISED STEEL SHEET
SEAL: POLYURETHANE
SURFACE TREATMENT: POWDER-COAT 80-120micron
COLOR: RAL 7035 LIGHT GREY

PROTECTION: IP66 IK10, NEMA4
STANDARD: EIA-310-D, IEC/EN/AS60529

© IP ENCLOSURES 2022.
THIS DRAWING SHALL NOT BE COPIED OR REPRODUCED
WITHOUT AUTHORISATION FROM IP ENCLOSURES.
www.ipenclosures.com.au

Itemref	Quantity	Title/Name, designation, material, dimension etc			Article No./Reference	
Designed by IP		Checked by IP	Approved by - date 19/10/22	Filename IP-SDW9RU45	Date 19/10/22	Scale 1:10

Enclosures

9RU 19" DATA RACK 450 DEEP

IP-SDW9RU45 | Edition 0 | Sheet 1/1