RevNo	Revision note	Date	Signature	Checked
1	GENERAL REVISION	30/07/26	IP	IP

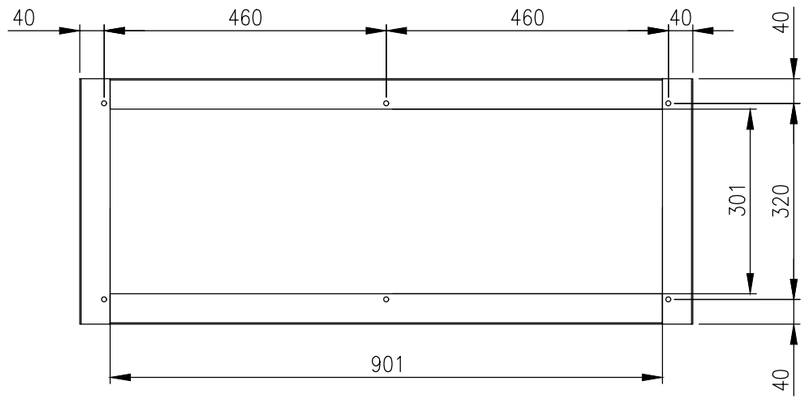

TOP VIEW

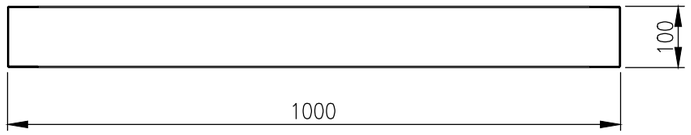

FRONT VIEW

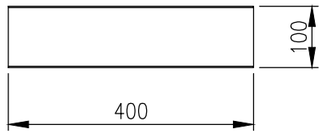

SIDE VIEW

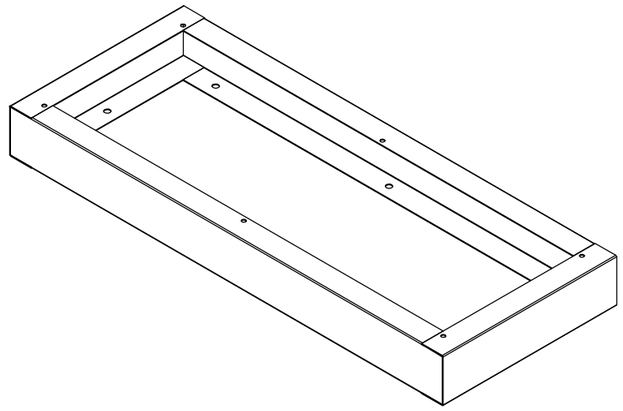

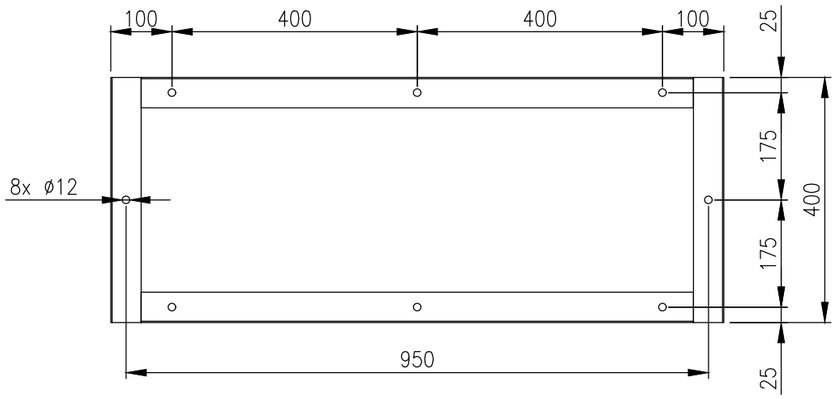

BOTTOM VIEW

MATERIAL:
BODY: 2.0mm GALVANISED STEEL SHEET
SURFACE TREATMENT: POWDER-COAT 80-120 MICRON
STANDARD COLOUR: RAL7035 LIGHT GREY

MASS: 6.0Kg.

© IP ENCLOSURES 2026.
THIS DRAWING SHALL NOT BE COPIED OR REPRODUCED
WITHOUT AUTHORISATION FROM IP ENCLOSURES.
www.ipenclosures.com.au

Itemref	Quantity	Title/Name, designation, material, dimension etc			Article No./Reference	
Designed by IP		Checked by IP	Approved by - date 28/07/23	Filename IP-PLINTH10040	Date 28/07/23	Scale 1:10
IP Enclosures		1000Wx400D STEEL PLINTH				
		IP-PLINTH10040			Edition 1	Sheet 1/1