RevNo	Revision note	Date	Signature	Checked

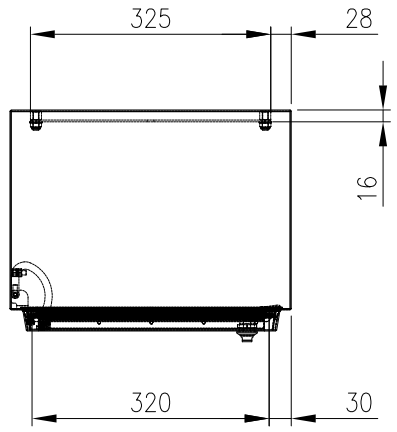

TOP VIEW

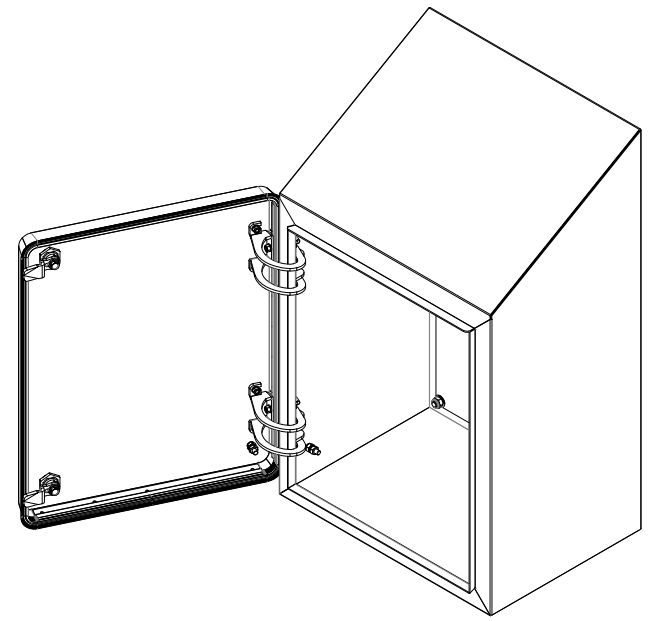

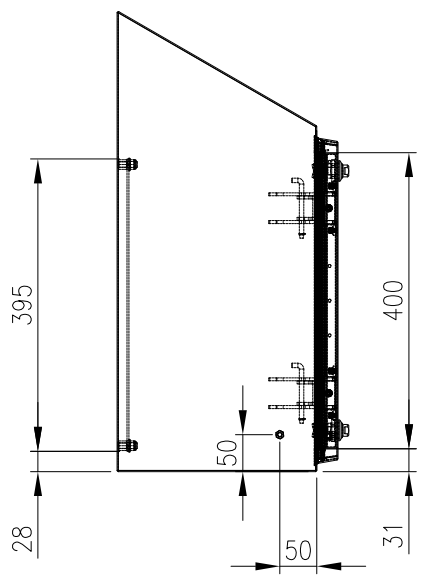

SIDE VIEW

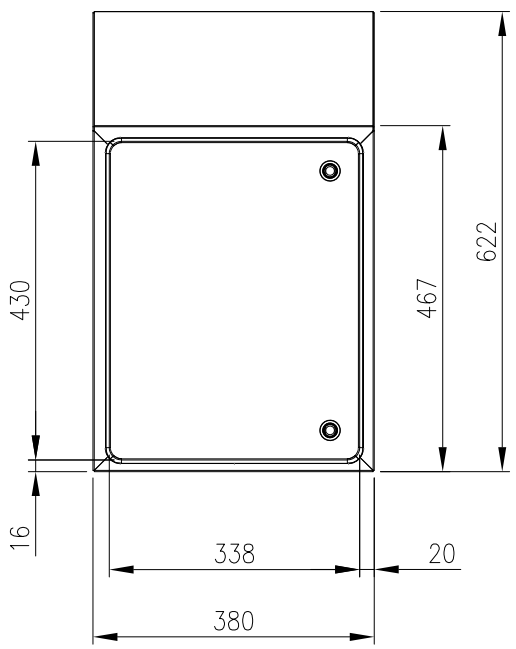

FRONT VIEW

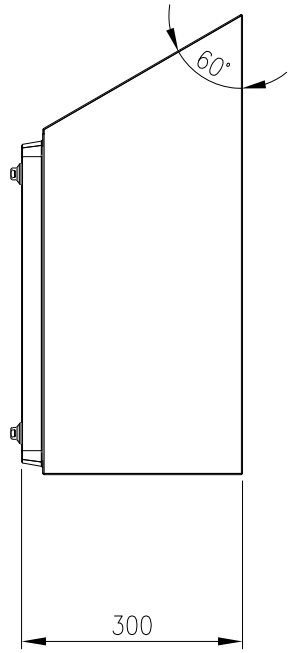

SIDE VIEW

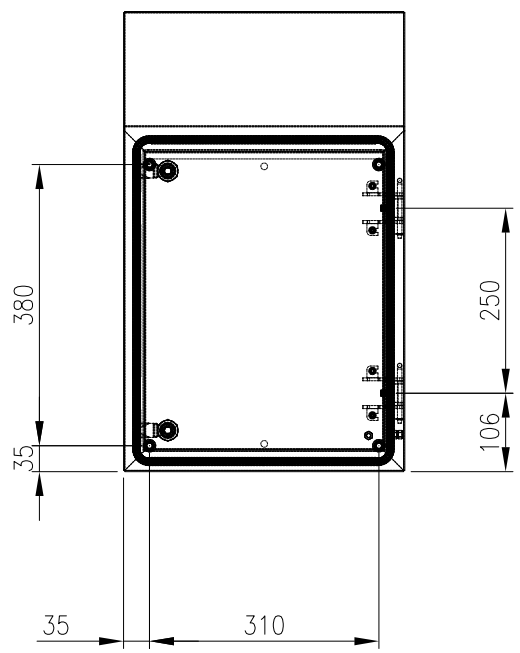

REAR VIEW

MATERIAL
BODY: 304 STAINLESS STEEL
DOOR: 304 STAINLESS STEEL
DEVICE PLATE: GALVANISED STEEL SHEET
SEAL: BLUE SILICONE. FDA COMPLIANT

PROTECTION: IP66, IP69K
STANDARD: DGUV EN1672-2, EN62208, EN/AS60529

© IP ENCLOSURES 2016.
THIS DRAWING SHALL NOT BE COPIED OR REPRODUCED
WITHOUT AUTHORISATION FROM IP ENCLOSURES.
www.ipenclosures.com.au

Itemref	Quantity	Title/Name, designation, material, dimension etc			Article No./Reference	
Designed by IP		Checked by IP	Approved by - date 20/05/21	Filename IP-H453830	Date 20/05/21	Scale 1:10
IP Enclosures		450x380x300 IP69K HYGIENIC ENCLOSURE				
		IP-H453830			Edition 0	Sheet 1/1