PRODUCT BROCHURE

Air Conditioners, Fans, Filters & Heaters

Enclosures®

www.ipenclosures.com.au

Thermal Control - Cooling

Air Conditioners

IP-AC

350W to 2kW | Indoor & Outdoor

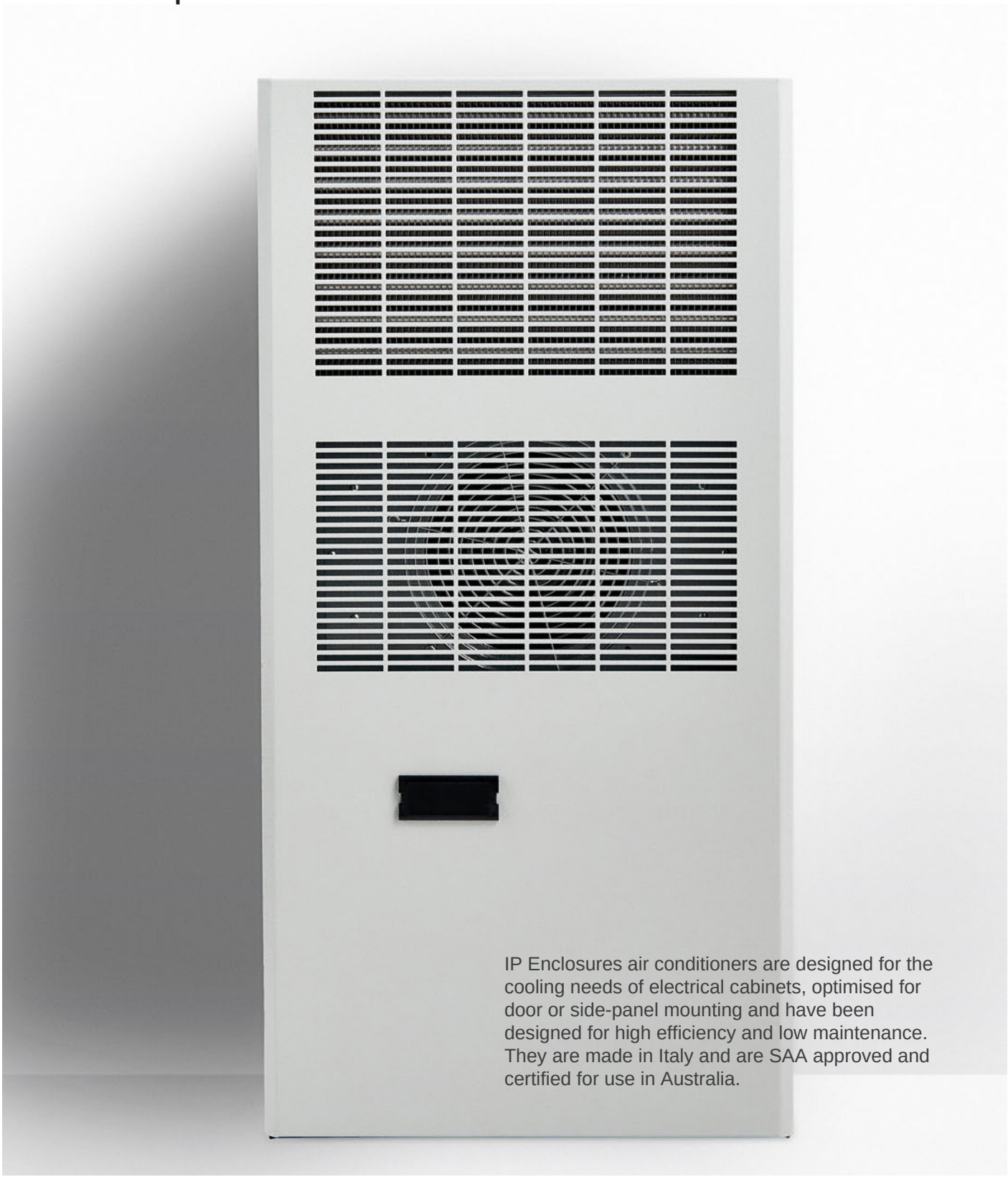

IP Enclosures air conditioners are designed for the cooling needs of electrical cabinets, optimised for door or side-panel mounting and have been designed for high efficiency and low maintenance. They are made in Italy and are SAA approved and certified for use in Australia.

350W Wall Mounted Air Conditioner		INDOOR	OUTDOOR
Part Number	SKU	IP-ACIWM035.001	IP-ACOWM035
Power supply	V/Hz	230V/1ph/50-60	
Dimensions HxWxD	mm	430x280x170	
Cooling capacity A35A35	W	350/370	
Cooling capacity A35A50	W	200/220	
Max current	A	1.8/1.9	
Delayed fuse	A	4	
Absorbed electric power A35A35	W	260/270	
Absorbed electric power A35A50	W	280/300	
Refrigerant	-	R134a	
Operating temperature (ambient)	°C (°F)	+ 20/+ 55 (+ 68/+ 131)	
Operating temperature (enclosure)	°C (°F)	+ 20/+ 45 (+ 69/+ 113)	

850W Wall Mounted Air Conditioner		INDOOR	OUTDOOR
Part Number	SKU	IP-ACIWM085.001	IP-ACOWM085
Power supply	V/Hz	230V/1ph/50-60	
Dimensions HxWxD	mm	635x305x210	
Cooling capacity A35A35	W	850/900	
Cooling capacity A35A50	W	625/650	
Max current	A	2.65/2.75	
Delayed fuse	A	6	
Absorbed electric power A35A35	W	450/470	
Absorbed electric power A35A50	W	530/560	
Refrigerant	-	R134a	
Operating temperature (ambient)	°C (°F)	+ 20/+ 55 (+ 68/+ 131)	
Operating temperature (enclosure)	°C (°F)	+ 20/+ 45 (+ 68/+ 113)	

1450W Wall Mounted Air Conditioner		INDOOR	OUTDOOR
Part Number	SKU	IP-ACIWM145.001	IP-ACOWM145
Power supply	V/Hz	230V/1ph/50-60	
Dimensions HxWxD	mm	800x400x240	
Cooling capacity A35A35	W	1450/1500	
Cooling capacity A35A50	W	1150/1200	
Max current	A	3.7/4.2	
Delayed fuse	A	6	
Absorbed electric power A35A35	W	650/700	
Absorbed electric power A35A50	W	770/850	
Refrigerant	-	R134a	
Operating temperature (ambient)	°C (°F)	+ 20/+ 55 (+ 68/+ 131)	
Operating temperature (enclosure)	°C (°F)	+ 20/+ 45 (+ 68/+ 113)	

2000W Wall Mounted Air Conditioner		INDOOR	OUTDOOR
Part Number	SKU	IP-ACIWM200.001	IP-ACOWM200
Power supply	V/Hz	230V/1ph/50-60	
Dimensions HxWxD	mm	1000x400x240	
Cooling capacity A35A35	W	2000/2100	
Cooling capacity A35A50	W	1200/1250	
Max current	A	6.6/6.9	
Delayed fuse	A	10	
Absorbed electric power A35A35	W	1060/1100	
Absorbed electric power A35A50	W	1240/1300	
Refrigerant	-	R134a	
Operating temperature (ambient)	°C (°F)	+ 20/+ 55 (+ 68/+ 131)	
Operating temperature (enclosure)	°C (°F)	+ 20/+ 45 (+ 68/+ 113)	

Note: Roof mounted air conditioners are also available upon request.

Thermal Control - Ventilation

Filter Vents & Fans

IP-V

12VDC to 230VAC | 26m3/h to 700m3/h | IP54 (IP55 with Vent Hood)

IP Enclosures range of filter fans and vents feature a modern Italian grille design with minimal external projection. The front-opening grille allows filters to be easily maintained from the outside of the enclosure.

IP-V

Features & Specifications

IP Enclosures provide a wide range of ventilation products for electrical enclosures. The front-opening grille allows filters to be easily maintained from the outside of the enclosure. All molded parts are made of highly resistant and self-extinguishing ABS.
IP Enclosures ventilation products are manufactured to the highest quality in Italy.

Protection: Complies with IP54 (or IP55 if used with High Efficiency Filter Mat IP-VFXX or Vent Hood)

Conformity: CE

Material: ABS UL94V-0 color RAL7035

Flow Direction: Reversible

FEATURES

Modern Design: A positive visual impact is provided by the modern grille design and minimal external projection. All molded parts are made of highly resistant and self-extinguishing ABS, UL94 VO grade. The standard color is RAL7035.

Easy Maintenance: Filter mats can be easily maintained from outside of the enclosure due to the front-opening grille. Replacement of soiled filter mats takes only a few seconds without the use of tools.

Wide Range of Air Flow Ratings: 26m3/h to 700m3/h

Optimal Enclosure Protection: The special configuration of the grille, foam seal gasket and filter mat ensures an IP54 protection of the enclosure.

Quick Electrical Connection: Fitted with spring terminals for faster and safer wiring. Default terminal position is above the fan but can be easily changed to bottom of fan to suit wiring needs without tools.

Reversible Fan: Default air flow direction is from outside to inside of the enclosure. If required, air flow can be reversed due to quick release fan lock system without the use of tools.

Fast Installation: Installation is fast due to the simple square cutout on the enclosure and the snap-in fixing system. No fasteners are required.

Vent Hoods: To obtain IP55 protection, use in conjunction with IP Enclosures vent hoods. Hinged vent hoods are available to provide operator access to easily maintain filters from the outside of the enclosure.

Easy Maintenance due to Front Opening Grille

114mm x 114mm 26m3/hr		Vent	230V Fan	115V Fan	12VDC Fan	24VDC Fan
Part Number	SKU	IP-V1000	IP-V1100	IP-V1101	IP-V1112	IP-V1124
Air flow rate (free blow)	m3/h	-	26 (30)		26	
Air flow rate with exit filter	m3/h	-	15 (18)		15	
Power supply	V/Hz	-	230 / 50-60	115 / 50-60	12DC	24DC
Dimensions HxWxD	mm	114x114x27	114x114x73		114x114x60	
Power consumption	W	-	13 (12)		3	4
Current consumption	A	-	0.10 (0.08)	0.14 (0.12)	0.25	0.16
Overcurrent protection	-	-	impedance			
Electrical connection	-	-	3-poles spring terminals *		2-poles spring terminals *	
Duty cycle	-	-	100%			
Operating temperature	°C (°F)	-10 / +70 (+14/+158)				
Protection degree / Class	-	IP54	IP54 / Class I			
Noise level	dB(A)	-	30 (35)		35	
Flow direction	-	-	reversible, default factory setting outside-in			
Bearing	-	-	ball			
Filter mat EN779	-	G2	G2			
Cut-out Dimensions	mm	92x92	92x92			
Material	-	ABS UL94V-0 color RAL7035				

150mm x 150mm 58m3/hr		Vent	230V Fan	115V Fan	24VDC Fan	48VDC Fan
Part Number	SKU	IP-V2000	IP-V2200	IP-V2201	IP-V2224	IP-V2248
Air flow rate (free blow)	m3/h	-	58(64)		58	
Air flow rate with exit filter	m3/h	-	43(48)		43	
Power supply	V/Hz	-	230 / 50-60	115 / 50-60	24DC	48DC
Dimensions HxWxD	mm	150x150x37	150x150x86			
Power consumption	W	-	22 (21)		9	13
Current consumption	A	-	0.14 (0.12)	0.26 (0.24)	0.37	0.27
Overcurrent protection	-	-	impedance			
Electrical connection	-	-	3-poles spring terminals *		2-poles spring terminals *	
Duty cycle	-	-	100%			
Operating temperature	°C (°F)	-10 / +70 (+14/+158)				
Protection degree / Class	-	IP54	IP54 / Class I			
Noise level	dB(A)	-	43(49)		45	
Flow direction	-	-	reversible, default factory setting outside-in			
Bearing	-	-	ball			
Filter mat EN779	-	G3	G3			
Cut-out Dimensions	mm	124x124	124x124			
Material	-	ABS UL94V-0 color RAL7035				

204mm x 204mm 115m3/hr		Vent	230V Fan	115V Fan	24VDC Fan	48VDC Fan
Part Number	SKU	IP-V3000	IP-V3200	IP-V3201	IP-V3224	IP-V3248
Air flow rate (free blow)	m3/h	-	115 (125)		115	
Air flow rate with exit filter	m3/h	-	84 (97)		84	
Power supply	V/Hz	-	230 / 50-60	115 / 50-60	24DC	48DC
Dimensions HxWxD	mm	204x204x37	204x204x104			
Power consumption	W	-	22 (21)		9	13
Current consumption	A	-	0.14 (0.12)	0.26 (0.24)	0.37	0.27
Overcurrent protection	-	-	impedance			
Electrical connection	-	-	3-poles spring terminals *		2-poles spring terminals *	
Duty cycle	-	-	100%			
Operating temperature	°C (°F)	-10 / +70 (+14/+158)				
Protection degree / Class	-	IP54	IP54 / Class I			
Noise level	dB(A)	-	43 (49)		45	
Flow direction	-	-	reversible, default factory setting outside-in			
Bearing	-	-	ball			
Filter mat EN779	-	G3	G3			
Cut-out Dimensions	mm	177x177	177x177			
Material	-	ABS UL94V-0 color RAL7035				

250mm x 250mm 125m3/hr		Vent	230V Fan	115V Fan	24VDC Fan	48VDC Fan
Part Number	SKU	IP-V4000	IP-V4200	IP-V4201	IP-V4224	IP-V4248
Air flow rate (free blow)	m3/h	-	125 (135)		125	
Air flow rate with exit filter	m3/h	-	102 (112)		102	
Power supply	V/Hz	-	230 / 50-60	115 / 50-60	24DC	48DC
Dimensions HxWxD	mm	250x250x38	250x250x107			
Power consumption	W	-	22 (21)		9	13
Current consumption	A	-	0.14 (0.12)	0.26 (0.24)	0.37	0.27
Overcurrent protection	-	-	impedance			
Electrical connection	-	-	3-poles spring terminals *		2-poles spring terminals *	
Duty cycle	-	-	100%			
Operating temperature	°C (°F)	-10 / +70 (+14/+158)				
Protection degree / Class	-	IP54	IP54 / Class I			
Noise level	dB(A)	-	43 (49)		45	
Flow direction	-	-	reversible, default factory setting outside-in			
Bearing	-	-	ball			
Filter mat EN779	-	G3	G3			
Cut-out Dimensions	mm	224x224	224x224			
Material	-	ABS UL94V-0 color RAL7035				

250mm x 250mm 255m3/hr to 410m3/hr			230V	115V	24VDC	48VDC	230V	115V	400V
Part Number	SKU	IP-V4000	IP-V4300	IP-V4301	IP-V4324	IP-V4348	IP-V4400	IP-V4401	IP-V4440
Air flow rate (free blow)	m3/h	-	255 (290)		255		410 (445)		
Air flow rate with exit filter	m3/h	-	202 (235)		202		280 (302)		
Power supply	V/Hz	-	230 / 50-60	115 / 50-60	24DC	48DC	230 / 50-60	115 / 50-60	400 / 50-60
Dimensions HxWxD	mm	250x250x38	250x250x128				250x250x136		
Power consumption	W	-	40 (38)		26	33	70 (90)		60 (70)
Current consumption	A	-	0.17 (0.16)	0.34 (0.32)	1.08	0.68	0.40 (0.38)	0.80 (0.76)	0.18 (0.15)
Overcurrent protection	-	-	thermal		impedance		thermal		
Electrical connection	-	-	3-poles spring terminals *		2-poles spring terminals *		3-poles spring terminals *		4-p s t*
Duty cycle	-	-	100%						
Operating temperature	°C (°F)	-10 / +70 (+14/+158)							
Protection degree / Class	-	IP54	IP54 / Class I						
Noise level	dB(A)	-	53 (58)		61		65 (68)		
Flow direction	-	-	reversible, default factory setting outside-in						
Bearing	-	-	ball						
Filter mat EN779	-	G3	G3						
Cut-out Dimensions	mm	224x224	224x224						
Material	-	ABS UL94V-0 color RAL7035							

325mm x 325mm 550m3/hr - 700m3/hr			230V Fan	115V Fan	400V Fan	230V Fan	115V Fan
Part Number	SKU	IP-V5000	IP-V5400	IP-V5401	IP-V5440	IP-V5500	IP-V5501
Air flow rate (free blow)	m3/h	-	550 (620)			700 (770)	
Air flow rate with exit filter	m3/h	-	405 (450)			520 (575)	
Power supply	V/Hz	-	230 / 50-60	115 / 50-60	400 / 50-60	230 / 50-60	115 / 50-60
Dimensions HxWxD	mm	325x325x42	325x325x140			325x325x154	
Power consumption	W	-	70 (90)		60 (70)	130 (180)	
Current consumption	A	-	0.40 (0.38)	0.80 (0.76)	0.18 (0.15)	0.55 (0.81)	1.10 (1.62)
Overcurrent protection	-	-	thermal				
Electrical connection	-	-	3-poles spring terminals *		4-p s t*	3-poles spring terminals *	
Duty cycle	-	-	100%				
Operating temperature	°C (°F)	-10 / +70 (+14/+158)					
Protection degree / Class	-	IP54	IP54 / Class I				
Noise level	dB(A)	-	65 (68)			72 (73)	
Flow direction	-	-	reversible, default factory setting outside-in				
Bearing	-	-	ball				
Filter mat EN779	-	G3	G3				
Cut-out Dimensions	mm	291x291	291x291				
Material	-	ABS UL94V-0 color RAL7035					

Thermal Control - Ventilation

Roof Vents & Roof Fans

IP-RV/RFV

230VAC | 600m3/h to 1000m3/h | IP44

IP Enclosures provide a wide range of roof mounted ventilation products for electrical cabinets.

Features & Specifications

IP-RV/RFV

IP Enclosures provide a wide range of ventilation products for electrical enclosures. All molded parts are made of highly resistant and self-extinguishing ABS. IP Enclosures ventilation products are manufactured to the highest quality in Italy.

Protection: Complies with IP44

Conformity: CE

Material: ABS UL94V-0 color RAL7035

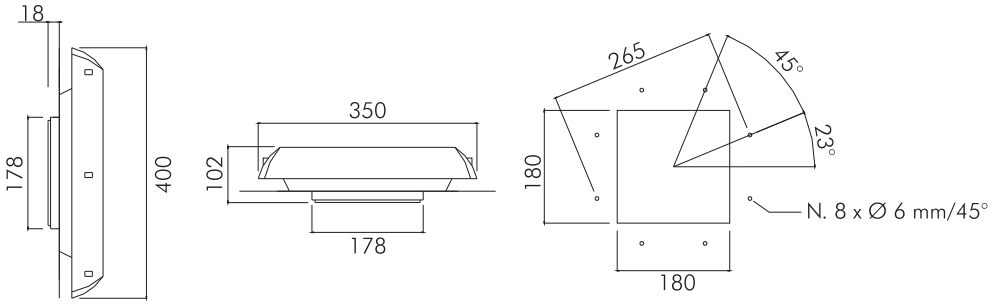

		Roof Vent	600m3 Fan		860m3 Fan		1000m3 Fan	
Features	**Unit**	**IP-RV1**	**IP-RFV1**	**IP-RFV1-115**	**IP-RFV2**	**IP-RFV2-115**	**IP-RFV3**	**IP-RFV3-115**
Air flow rate (free blow)	m³/h	-	600(625)		860(950)		1000(1050)	
Flow rate with inlet filter	m³/h	-	430(450)		580(640)		700(720)	
Power supply	V/Hz	-	230/50-60	115/50-60	230/50-60	115/50-60	230/50-60	115/50-60
Dimensions HxWxD	mm	400x350x102	400x350x102					
Power consumption	W	-	70(90)		85(115)		120(170)	
Current consumption	A	-	0.32(0.40)	0.64(0.80)	0.43(0.50)	0.86(1.00)	0.50(0.75)	1.00(1.50)
Overcurrent protection	-	-	thermal					
Electric connection	-	-	4-pole terminal 2.5 mm²					
Duty cycle	-	-	100%					
Operating temperature	°C(°F)	-10/+70 (+14/+158)						
Protection degree enclosure side	-	IP44						
Protection class	-	-	Class I					
Noise level	dB(A)	-	64(65)		72(73)			
Flow direction	-	-	inside-out					
Bearing	-	-	ball					
Service life (at 40°C)	hr	-	50 000					
Material	-	ABS UL94V-0 Color RAL7035						
Gasket	-	self-adhesive						
Weight (with packaging)	kg	2.30(2.50)	3.65(3.85)		4.00(4.20)		4.75(4.95)	
Package dimensions	mm	410x360x130						
Mounting	-	Screws						
Conformity/Certifications	-	CE						

Thermal Control - Heating

Anti-Condensation Heaters

IP-H

Compact, Touch Shield & Fan-Assisted | 75W to 750W

Anti-condensation heaters are required to prevent failures or corrosion caused by low temperatures or high humidity. IP Enclosures heating products are manufactured to the highest quality in Italy.

Anti-Condensation Heaters for Electrical Enclosures

IP-H

IP Enclosures provide a range of heating products for electrical enclosures. Our range of heating products are manufactured to the highest quality in Italy.

Compact | 75W to 150W

FEATURES	UNIT	IP-H75	IP-H100	IP-H150
Heating Capacity*	W	75	100	150
Power supply	V	120-240V AC or DC		
Inrush current	A	4	5	9.5
Delayed fuse (advised)	A	6.3	8	10
Heating element type	-	PTC resistor, self regulating		
Electrical connections		2 screw terminals for stranded or rigid wire 2.5 mm²		
Protection class	-	Class II		
Protection degree EN60529	-	IP20		
Operating temperature	°C (°F)	-45/+70 (-49/+158)		
Storage temperature	°C (°F)	-45/+80 (-49/+176)		
Radiator	-	Extruded aluminium profile		
Mounting	-	Clip for mounting on DIN rail 35 mm EN50022		
Installation position	-	Best efficiency in vertical position		
Dimensions HxWxD	mm	140x59x61		220x59x61
Weight (with packaging)	kg	0.34 (0.38)		0.57 (0.62)
Conformity/Certifications	-	CE - UL		

*at 20°C (68°F) ambient temperature

Touch Shield | 25W to 150W

FEATURES	UNIT	IP-TSH25	IP-TSH50	IP-TSH75	IP-TSH100	IP-TSH150
Heating Capacity*	W	25	50	75	100	150
Power supply	V	120-240V AC or DC				
Inrush current	A	2.5	3.5	4	5	9.5
Delayed fuse (advised)	A	4	4	6.3	8	10
Heating element type	-	PTCresistor, self regulating				
Electrical connections	-	2 screw terminals for stranded or rigid wire 2.5 mm²				
Protection class	-	Class II				
Protection degree EN60529	-	IP20				
Operating temperature	°C (°F)	-45/+70 (-49/+158)				
Storage temperature	°C (°F)	-45/+80 (-49/+176)				
Radiator	-	Extruded aluminium profile, with plastic cover				
Mounting	-	Clip for mounting on DIN rail 35 mm EN50022				
Installation position	-	Best efficiency in vertical position				
Dimensions HxWxD	mm	125x41x41		140x63x70		220x63x70
Weight (with packaging)	kg	0.16 (0.19)		0.42 (0.46)		0.66 (0.72)
Conformity/Certifications	-	CE - UL				

*at 20°C (68°F) ambient temperature

Fan Assisted | 250W to 750W

FEATURES	UNIT	IP-FH250	IP-FH251	IP-FH400	IP-FH401	IP-FH500	IP-FH501	IP-FH750	IP-FH751
Heating Capacity	W	250	250	400	400	500	500	750	750
Power supply	V/Hz	230/50-60	115/50-60	230/50-60	115/50-60	230/50-60	115/50-60	230/50-60	115/50-60
Max. current	A	1.2	2.4	1.9	3.8	2.4	4.8	3.6	7.2
Heating element type	-	Resistor							
Thermal protection	-	Thermal cut out fuse in case of fan failure							
Radiator	-	Extruded aluminium profile, anodized							
Axial fan	-	Ball bearing, service life 50.000 hrs at 25°C (77°F) air flow rate 35 m³/h, free flow						air flow rate 44 m³/h, free flow	
Signalling		Green LED power ON							
Electrical connections	-	3 screw terminals for stranded or rigid wire 2.5 mm²							
Protection class	-	Class I, earthed							
Protection degree EN60529	-	IP20							
Operating temperature	°C (°F)	-25/+70 (-13/+158)							
Storage temperature	°C (°F)	-45/+80 (-49/+176)							
Mounting	-	Clip for mounting on DIN rail 35 mm EN50022							
Installation position	-	Best efficiency in vertical position							
Dimensions HxWxD	mm	135x112x82	135x112x82	165x112x82	165x112x82	165x112x82	165x112x82	225x112x82	225x112x82
Weight (with packaging)	kg	0.88(0.94)	0.88(0.94)	0.97(1.04)	0.97(1.04)	0.97(1.04)	0.97(1.04)	1.35(1.42)	1.35(1.42)
Conformity/Certifications		CE - UL							

Thermal Control - Controllers

Thermostats, Hygrostat & Fan Speed Controller

IP Enclosures thermal control products are manufactured to the highest quality in Italy and are suitable for use with IP Enclosures range of heating and cooling products.

Single Thermostats | NC/NO

Features	Unit	IP-THNC1	IP-THNC2	IP-THNC3	IP-THNO1	IP-THNO2	IP-THNO3
Contact function	-	NC	NC	NC	NO	NO	NO
Temperature setting range	°C	-10/+50	0/+60	+20/+80	-10/+50	0/+60	+20/+80
Precision	°C	±4					
Hysteresis	°C	7					
Max switching current							
250Vac resistive load (inductive load)	A	10 (1.6)					
125Vac resistive load (inductive load)	A	15 (2.5)					
Max. switching power in Vdc	W	30					
Temperature sensor type	-	Thermostatic bimetal					
Contact type	-	Snap action					
Contact resistance	mOhm	< 10					
Service life	cycles	> 100 000					
Electrical connections	-	2-pole terminal for 2.5 mm² wire					
Casing	-	PA6, UL94 V0 self-estinguishing, light grey RAL 7035					
Protection degree EN60529	-	IP20					
Operating temperature	°C (°F)	-25/+80 (-13/+176)					
Storage temperature	°C (°F)	-45/+80 (-49/+176)					
Mounting	-	Clip for mounting on DIN rail 35 mm EN50022					
Installation position	-	Variable					
Conformity/Certifications	-	CE-ULc us					
Dimensions HxWxD	mm	61x34x35					

Double Thermostats | NC/NO

Features	Unit	IP-THD1		IP-THD2		IP-THD3	
Contact function	-	NC	NO	NC	NO	NO	NO
Temperature setting range	°C	-10/+50	+20/+80	0/+60	0/+60	0/+60	0/+60
Precision	°C	±4					
Hysteresis	°C	7					
Max switching current							
250Vac resistive load (inductive load)	A	10 (1.6)					
125Vac resistive load (inductive load)	A	15 (2.5)					
Max. switching power in Vdc	W	30					
Temperature sensor type	-	Thermostatic bimetal					
Contact type	-	Snap action					
Contact resistance	mOhm	< 10					
Service life	cycles	> 100 000					
Electrical connections	-	2-pole terminal for 2.5 mm² wire					
Casing	-	PA6, UL94 V0 self-estinguishing, light grey RAL 7035					
Protection degree EN60529	-	IP20					
Operating temperature	°C (°F)	-25/+80 (-13/+176)					
Storage temperature	°C (°F)	-45/+80 (-49/+176)					
Mounting	-	Clip for mounting on DIN rail 35 mm EN50022					
Installation position	-	Variable					
Conformity/Certifications	-	CE-ULc us File n. E348803					
Dimensions HxWxD	mm	61x53x35					

Mechanical Hygrostat

Features	Unit	IP-MH1
Relative Humidity setting range	RH%	20-90
Relative Humidity Hysteresis	RH%	5 (max 10)
Precision	RH%	±4
Operating temperature	°C (°F)	-10/+50 (+14/+122)

Fan Speed Controller (Image not shown)

Features	Unit	FSC
Power supply	V/Hz	100-230/50-60
Temperature setting range	°C	+20 / +60
Fan speed setting range	%	0 - 100
Speed controller	-	partialization of wave
Input	-	NTC sensor
Max. output fan	-	300 W (100-230/50-60Hz)
Electrical connection	-	terminal for 2.5 mm² wire
Optical signal	-	LED
Casing	-	PA6, UL94 V0 self-estinguishing, light grey RAL 7035
Protection degree EN60529	-	IP20

IP ENCLOSURES PTY LTD
ABN 17 168 921 319
Head Office: 19-27 Fred Chaplin Circuit, Bells Creek QLD 4551
sales@ipenclosures.com.au | www.ipenclosures.com.au
T: 1300 576 094 | + 61 7 5450 1489
GLOBAL DISTRIBUTION: UK Europe USA UAE NZ Asia-Pacific

© IP Enclosures 2021