RevNo	Revision note	Date	Signature	Checked

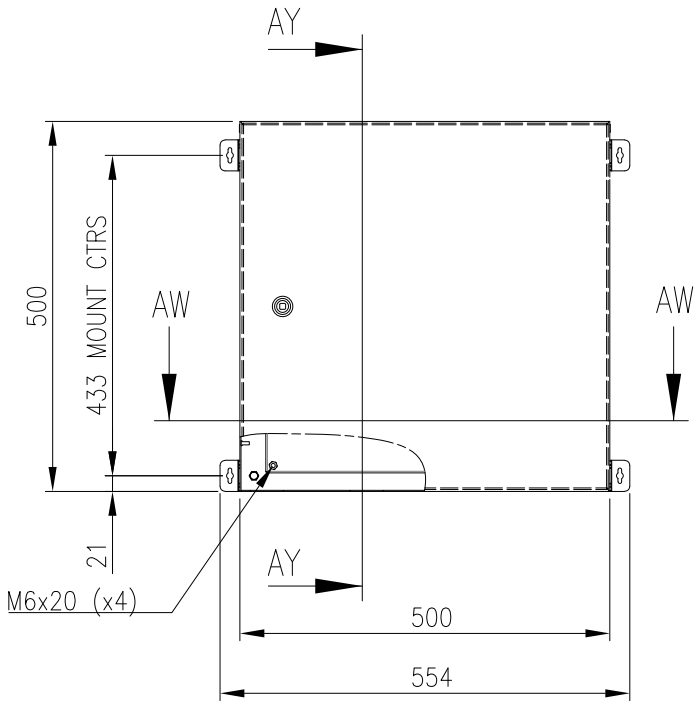

FRONT VIEW

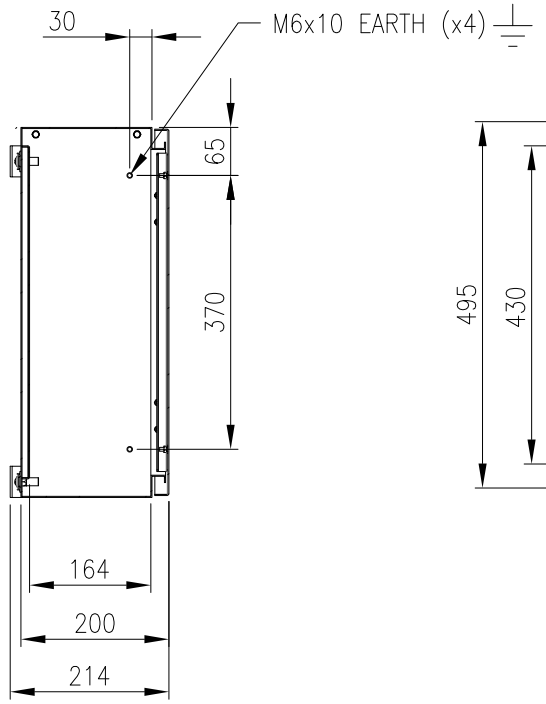

SECTION AY–AY

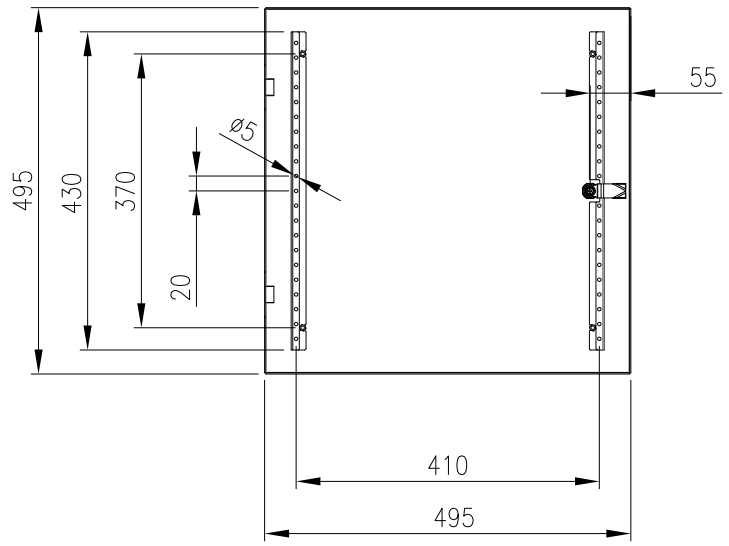

INSIDE DOOR VIEW

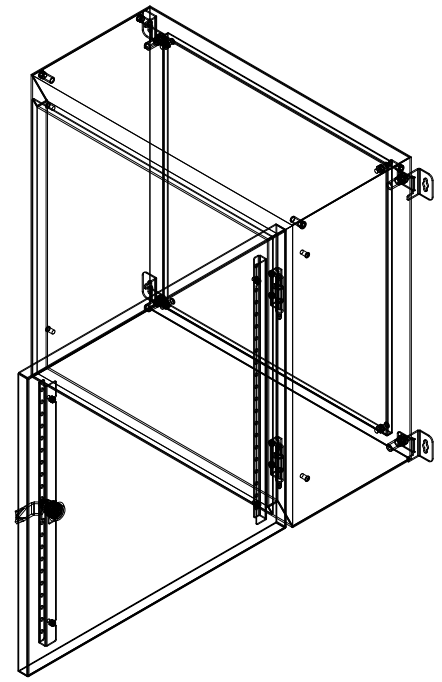

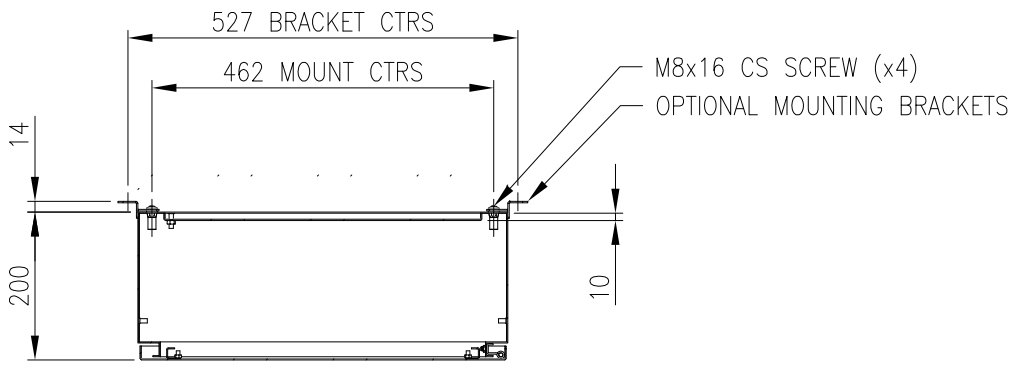

SECTION AW–AW

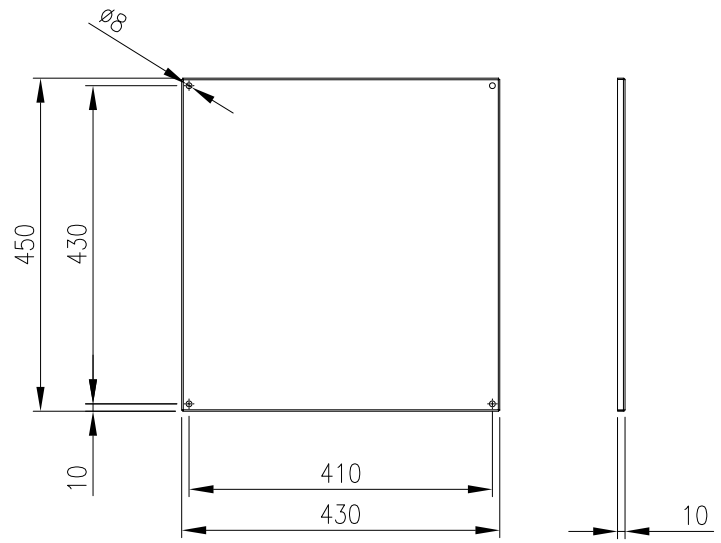

DEVICE MOUNTING PLATE

MATERIAL
BODY: MARINE GRADE ALUMINUM
DOOR: MARINE GRADE ALUMINIUM
DEVICE PLATE: 1.5mm GALV STEEL
SEAL: POLYURETHANE

PROTECTION: IP66 IK10, NEMA4x
STANDARD: IEC62208, IEC/EN/AS60529

© IP ENCLOSURES 2016.
THIS DRAWING SHALL NOT BE COPIED OR REPRODUCED
WITHOUT AUTHORISATION FROM IP ENCLOSURES.
www.ipenclosures.com.au

Itemref	Quantity	Title/Name, designation, material, dimension etc		Article No./Reference	
Designed by IP	Checked by IP	Approved by - date 05/07/21	Filename IP–A505020–01	Date 05/07/21	Scale 1:10
Enclosures		500x500x200 ALUMINIUM ENCLOSURE			
		IP–A505020–01		Edition 0	Sheet 1/1