RevNo	Revision note	Date	Signature	Checked
3	GENERAL REVISION	13/01/23	IP	IP

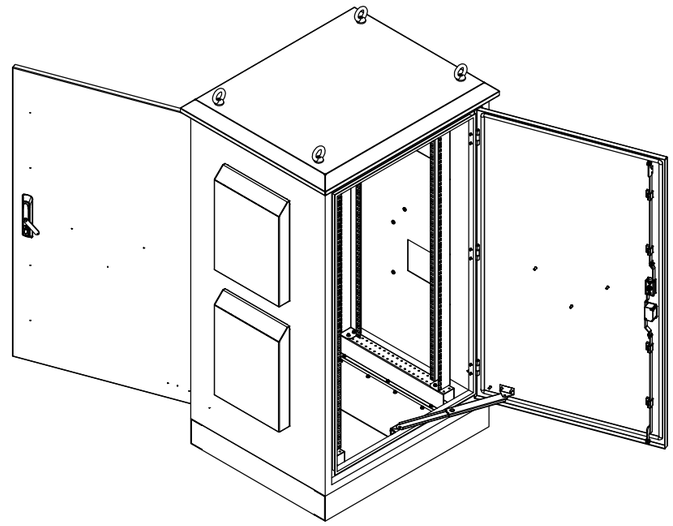

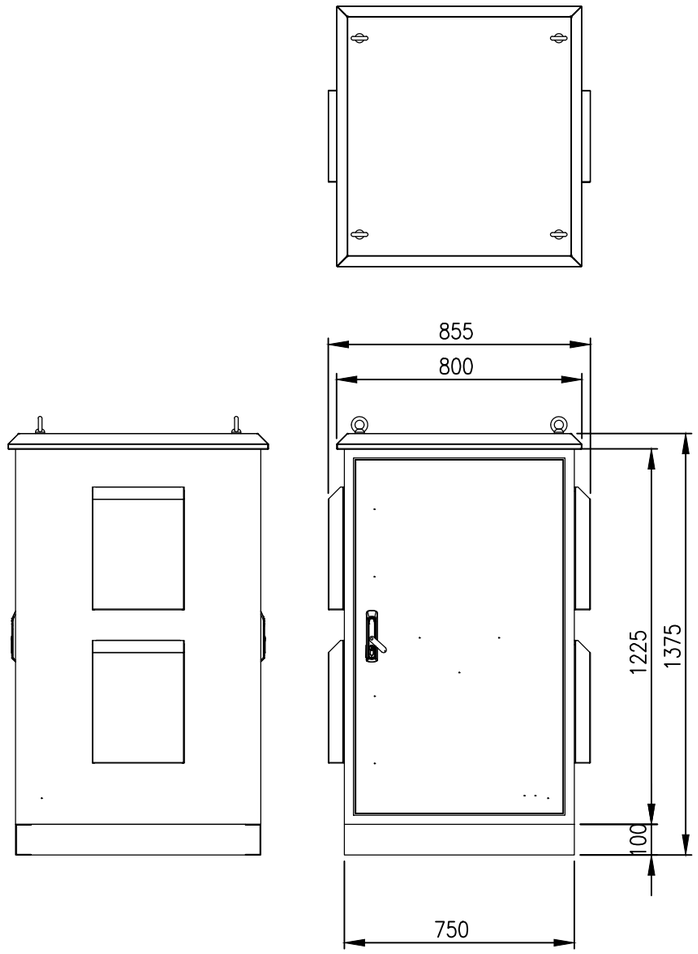

SIDE VIEW

FRONT VIEW
(ASSEMBLY)

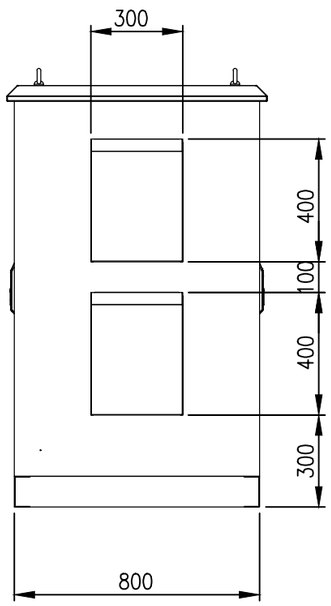

SIDE VIEW

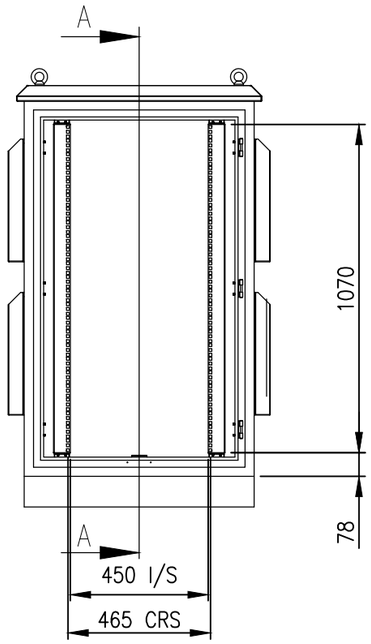

FRONT VIEW
(FRONT DOOR REMOVED)

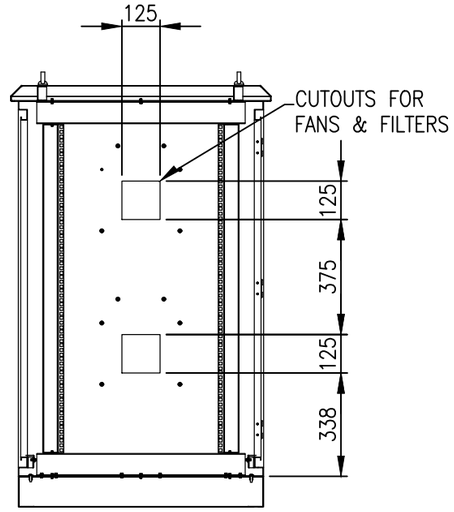

SECTION A–A

MATERIAL
BODY AND PLINTH: 2.0mm GALVANISED STEEL SHEET
DOORS: 2.0mm POWDERCOATED GALVANISED SHEET
19" DATA RAILS: 1.5mm GALVANISED STEEL SHEET
SEAL: POLYURETHANE
SURFACE TREATMENT: POWDER–COAT 80–120micron
COLOUR: RAL7035 LIGHT GREY, SMOOTH FINISH

PROTECTION: IP55 (EXCLUDING FANS/FILTER CUTOUTS)
STANDARD: IEC62208, IEC/EN/AS60529, EIA–310D

© IP ENCLOSURES 2017.
THIS DRAWING SHALL NOT BE COPIED OR REPRODUCED
WITHOUT AUTHORISATION FROM IP ENCLOSURES.
www.ipenclosures.com.au

Itemref	Quantity	Title/Name, designation, material, dimension etc			Article No./Reference
Designed by IP	Checked by IP	Approved by - date 05/06/19	Filename IP–A1377580	Date 05/06/19	Scale 1:20

Enclosures

24RU IP55 19" CABINET 1375x750x800

IP–A1377580 | Edition 3 | Sheet 1/1