RevNo	Revision note	Date	Signature	Checked

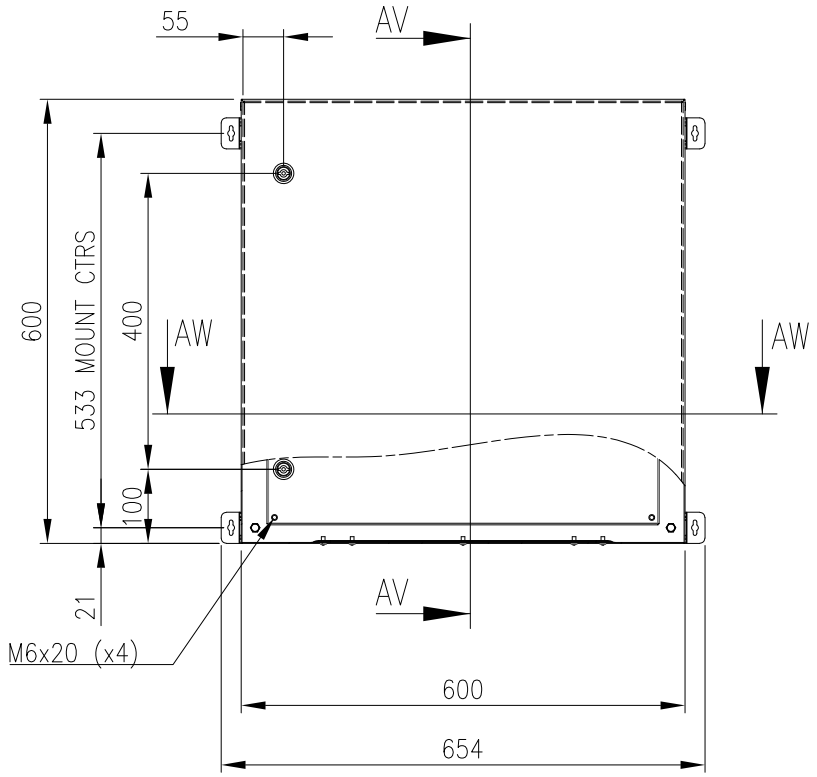

FRONT VIEW

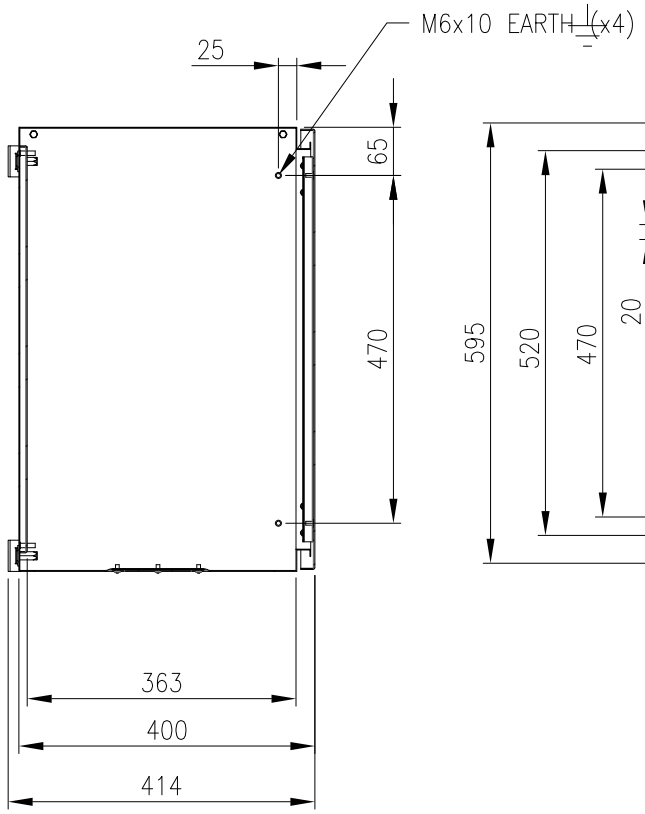

SECTION AV–AV

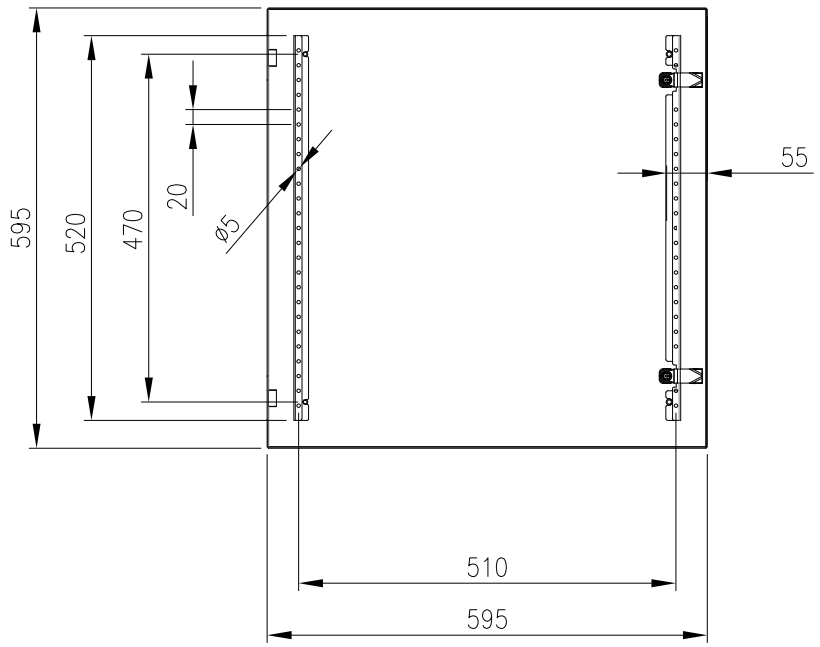

INSIDE DOOR VIEW

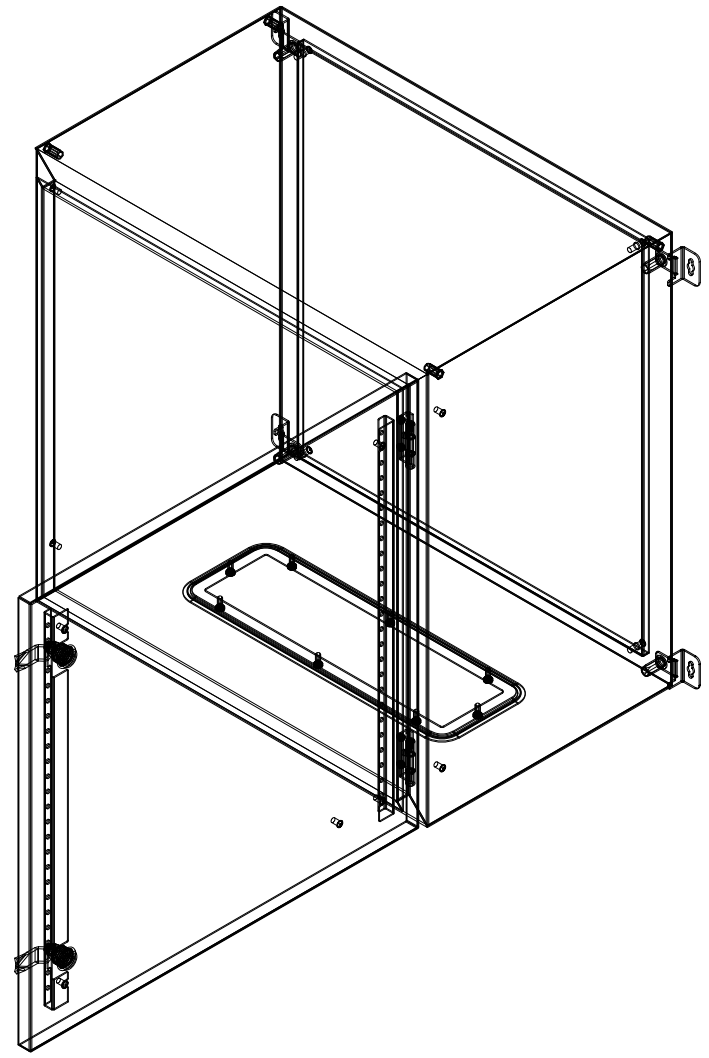

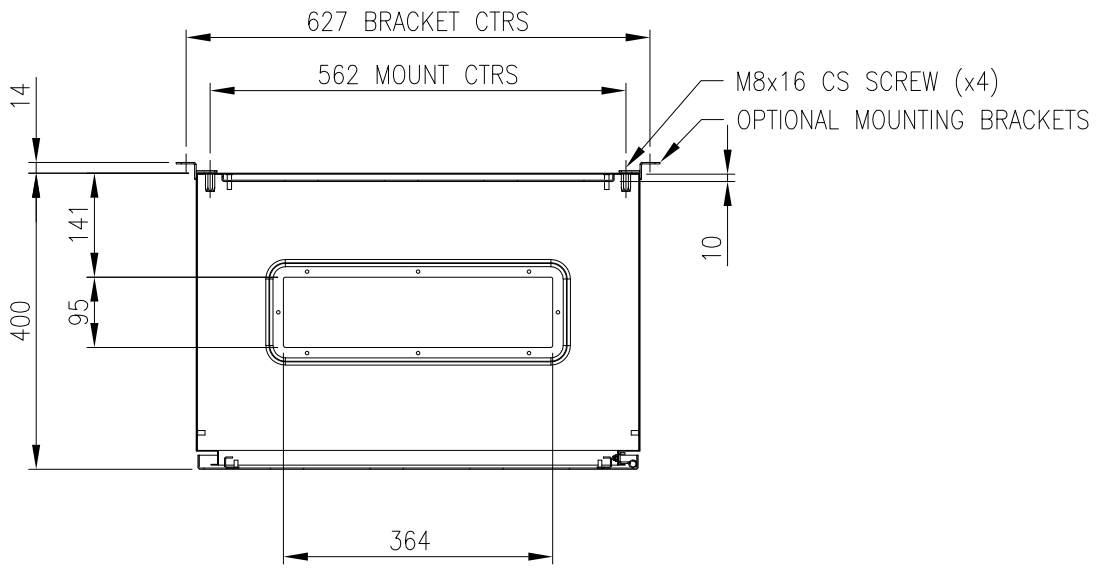

SECTION AW–AW

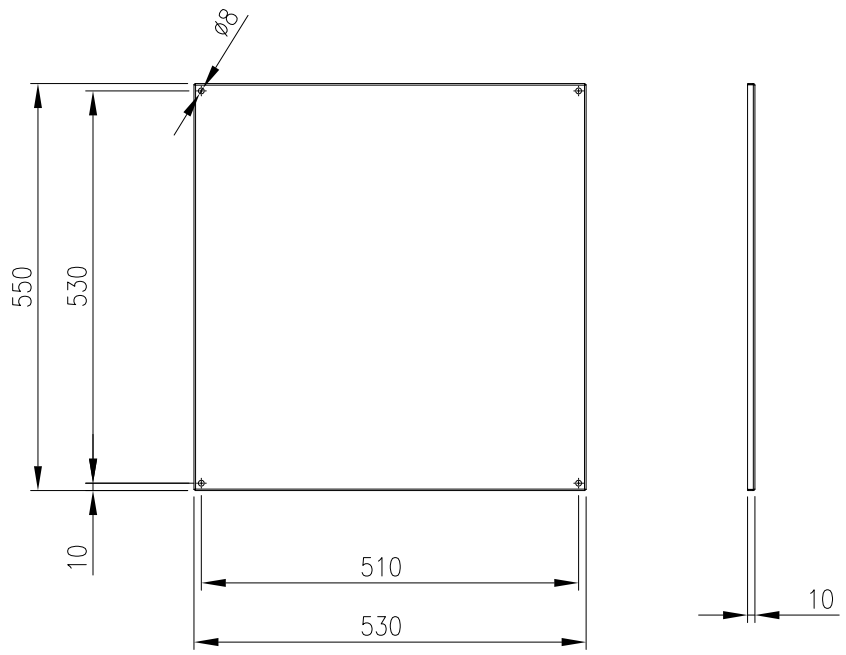

DEVICE MOUNTING PLATE

MATERIAL
BODY: 1.2mm GALVANISED STEEL SHEET
DOOR: 1.5mm GALVANISED STEEL SHEET
DEVICE PLATE: 1.5mm GALVANISED STEEL SHEET
SEAL: POLYURETHANE
SURFACE TREATMENT: POWDER–COAT 80–120micron

MASS: 27.0kg

PROTECTION: IP66 IK10, NEMA4
STANDARD: IEC62208, IEC/EN/AS60529

© IP ENCLOSURES 2016.
THIS DRAWING SHALL NOT BE COPIED OR REPRODUCED
WITHOUT AUTHORISATION FROM IP ENCLOSURES.
www.ipenclosures.com.au

Itemref	Quantity	Title/Name, designation, material, dimension etc			Article No./Reference	
Designed by IP		Checked by IP	Approved by - date 08/07/19	Filename IP–606040–01	Date 08/07/19	Scale 1:10
IP Enclosures		600x600x400 STEEL ENCLOSURE				
		IP–606040–01			Edition 0	Sheet 1/1