RevNo	Revision note	Date	Signature	Checked
0	GENERAL REVISION		IP	IP

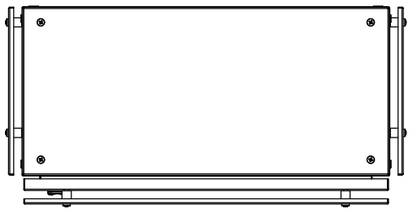

TOP VIEW

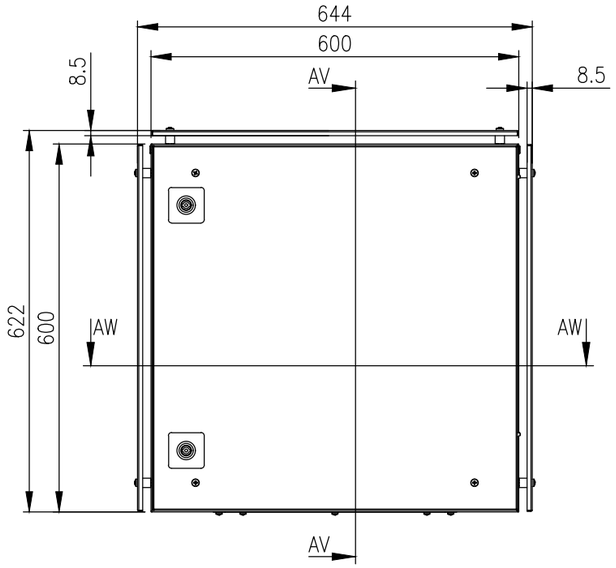

FRONT VIEW

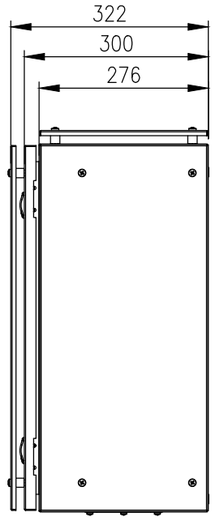

RIGHT VIEW

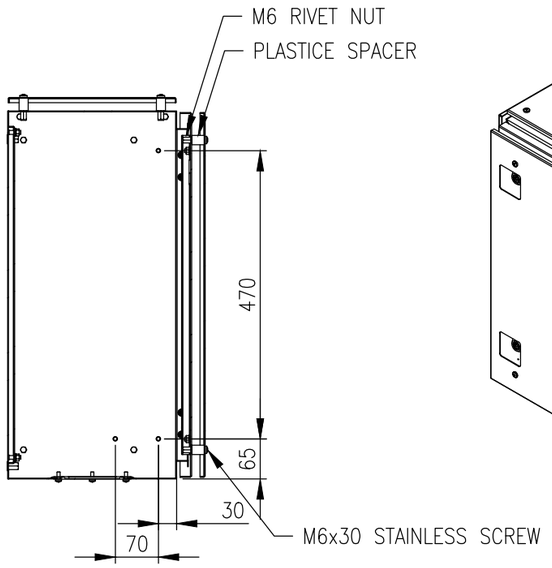

SECTION AV–AV

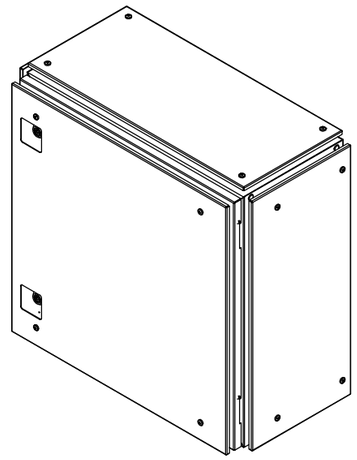

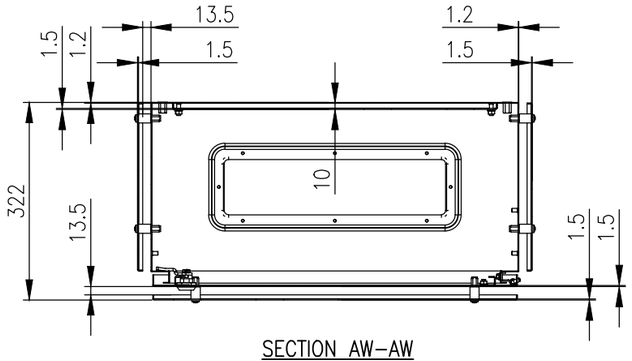

SECTION AW–AW

MATERIAL
BODY: 1.2mm GALVANISED STEEL SHEET
DOOR: 1.5mm GALVANISED STEEL SHEET
SUN SHIELDS: 1.5mm GALV. STEEL SHEET with STAINLESS STEEL FASTENERS
DEVICE PLATE: 1.5mm GALVANISED STEEL SHEET
GLAND PLATE: 1.5mm GALVANISED STEEL SHEET
SEAL: POLYURETHANE
SURFACE TREATMENT: POWDER–COAT 80–120micron
COLOUR: RAL7035 LIGHT GREY

MASS: 33.5Kg.

PROTECTION: IP66 IK10 (NEMA 4)
STANDARD: IEC/EN62208, IEC/EN/AS60529

© IP ENCLOSURES 2025.
THIS DRAWING SHALL NOT BE COPIED OR REPRODUCED WITHOUT AUTHORISATION FROM IP ENCLOSURES.
www.ipenclosures.com.au

Itemref	Quantity	Title/Name, designation, material, dimension etc			Article No./Reference	
Designed by IP		Checked by IP	Approved by - date 17/03/25	Filename IP–606030SUN	Date 17/03/25	Scale 1:10
IP Enclosures		600Hx600Wx300D ELECTRICAL ENCLOSURE with SUNSHIELDS				
		IP–606030SUN			Edition 0	Sheet 1/1