SS1 Electrical Enclosure

IP-304-303015

304 STAINLESS STEEL | SINGLE DOOR | IP66

300H x 300W x 150D

The SS1 range of stainless steel electrical enclosures are rated for protection up to IP66. This range is wall-mounted, grade 304L stainless steel, single door construction suitable for extreme duty applications.

Protection: IP66 IK10 (NEMA 4x)

Standards (& Conformities): IEC/EN 60529, IEC/EN 62208, IEC/EN 61439, RoHS

N° file E534557

Material:
- Body: 1.5mm Grade 304L stainless steel
- Door: 1.5mm Grade 304L stainless steel
- Device Mounting Plate: 1.5mm galvanised steel sheet
- Seal: Polyurethane

Surface Finish: 0.4 micron Ra surface brushed finish.

Enclosure Body: The robust monoblock body is fabricated using 1.5mm Grade 304L stainless steel. Flat face sealing surfaces are provided to increase seal life. Pre-fitted blind nutserts are incorporated to accommodate mounts and accessory fasteners to eliminate drilling and retain IP rating. Integral device plate mounts and M6 earth studs are provided. Cutting, pressing and full continuous seam welding using precision automated manufacturing equipment ensures accuracy and consistent high quality.

Enclosure Door: The robust surface mounted door is fabricated using 1.5mm Grade 304L stainless steel and incorporates concealed removable hinges with captive pins. The door is designed for a 110° opening. Each door contains cable management rail, an M6 earth stud and a high quality machine-applied foamed in place (FIP) Polyurethane seal. Two internal cable management rails can be removed to provide additional space for equipment, duct and door mounted control components.

Enclosure Seal: A high quality machine-applied full perimeter UL listed Polyurethane seal foamed in place (FIP) provides excellent sealing over a long life. Temperature resistance -40°C to 80°C (160°C short term loading).

Enclosure Lock: Grade 316 stainless steel 8mm square drive quarter turn lock with key.

Device Mounting Plate: The device mounting plate is 1.5mm galvanised steel sheet. It is pressed to provide strength and is pre-fitted into the enclosure as standard.

Mass: 6.1Kg.

Maximum Weight of Contents: 82Kg.

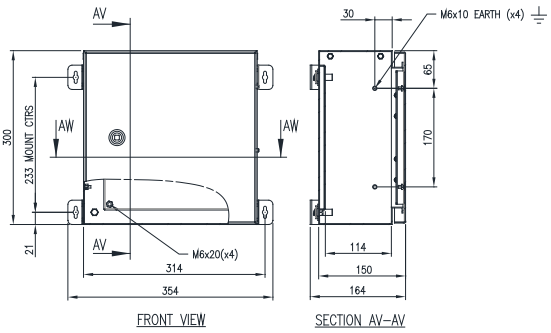

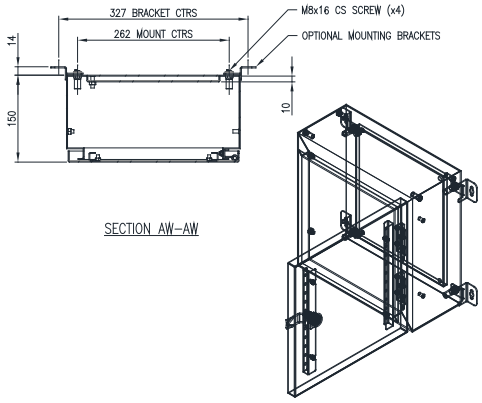

© IP Enclosures 2025

SS1 Electrical Enclosure IP-304-303015

304 STAINLESS STEEL | SINGLE DOOR | IP66 300H x 300W x 150D

ACCESSORIES:

Part Number	Description
IP-SSID3030	316 Stainless Steel Inner Door (To suit Enclosure 300mmH x 300mmW)
IP-DINRAIL 7.5X35-230	DIN RAIL x 230mm (Pack of 10)
IP-EK01	Standard Earthing Kit
IP-SSRH3015	316 Stainless Steel Rain Hood 300mmW x 150mmD
IP-SOLSS3015	316 Stainless Steel Solar Panel Bracket Set (Including 2 Brackets & Fasteners)
IP-SSWMBKIT	316 Stainless Steel Wall-Mounting Bracket Kit (with 4x Brackets and Fasteners)
IP-SSPMP300	316 Stainless Steel U-Channel Profile 300mm Long; Powder-Coated
IP-SSPMB	361 Stainless Steel Pole Mount Bracket to Suit Large Diameter Poles (Use with Bandit Strap)
IP-L031	316 Stainless Steel Wing Knob Padlockable

CERTIFICATES:

IEC 60529 Degrees of protection provided by enclosures: Certificate AB-0386-T 1902.14 02/00
IEC/EN 62208 Empty Enclosures for low-voltage switchgear and controlgear assemblies: Certificate 0366932-TSE-01/01
IEC/EN61439-1, 61439-2 low voltage switchgear and controlgear assemblies: Certificate AB-0341-T, 23-297-R1-N1-1
CE Certificate of Compliance: Certificate SZL-21 MA 13338-1
UKCA Certificate of Compliance: Certificate SZU-22 MA 19560-1
UL: Listing Number E534557

IEC/EN 61439 Certified Test Ratings:

Rated Voltage:	400 V AC
Rated Insulation Voltage:	690 V
Rated Impulse Withstand Voltage:	6 kV
Rated Current:	630A
Rated Peak Withstand Voltage:	40kA
Rated Short-Time Withstand Current:	20kA (Busbar)
Rated Conditional Short Circuit Current:	20kA
Rated Frequency:	50Hz

Products are manufactured to Quality, Safety and Environmental Standards.

WARRANTY: 5 years.

© IP Enclosures 2025