| RevNo | Revision note | Date | Signature | Checked |
|---|---|---|---|---|
| 1 | GENERAL REVISION | 15/08/25 | IP | IP |

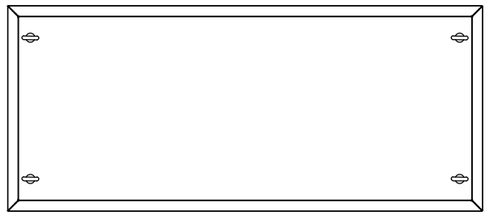

TOP VIEW

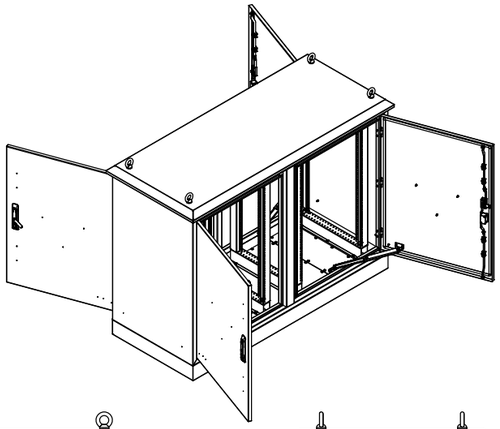

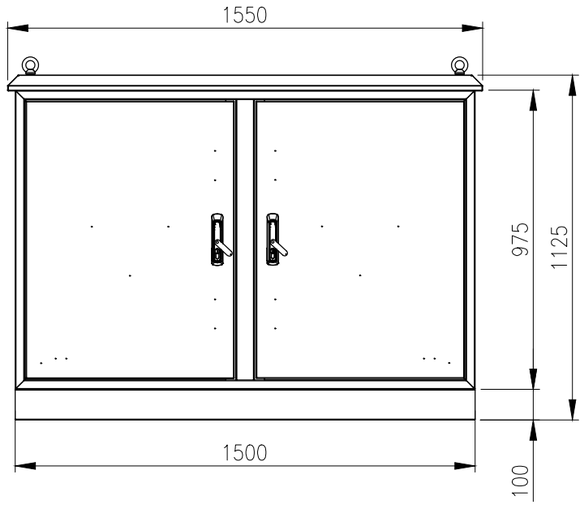


FRONT VIEW

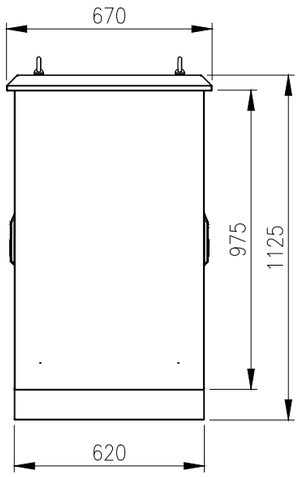


RIGHT SIDE VIEW

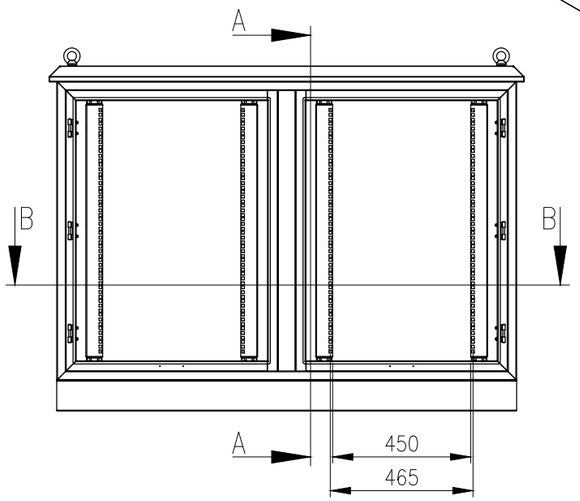


INTERIOR VIEW–DOOR REMOVED

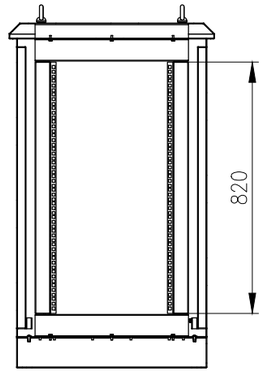


SECTION A–A

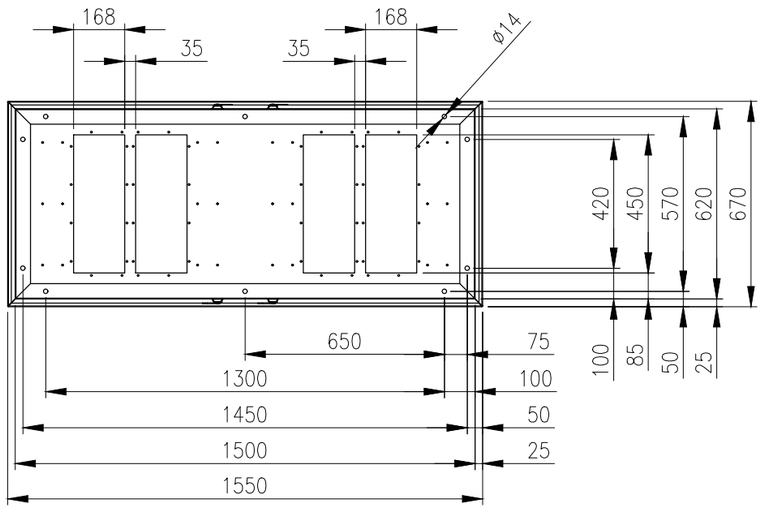


BOTTOM VIEW

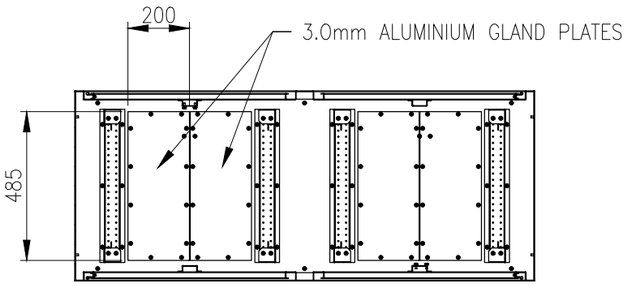


SECTION B–B

MATERIAL
BODY AND PLINTH: 2.0mm GALVANISED STEEL SHEET
DOORS: 2.0mm GALVANISED STEEL SHEET
19" DATA RAILS: 1.5mm GALVANISED STEEL SHEET
GLAND PLATE: 3.0mm ALUMINIUM
SEAL: POLYURETHANE
SURFACE TREATMENT: POWDER–COAT 80–120micron
COLOUR: RAL7035 GREY, SMOOTH FINISH

PROTECTION: IP66 IK10
STANDARD: IEC/EN62208, IEC/EN/AS60529, EIA–310D

© IP ENCLOSURES 2023.
THIS DRAWING SHALL NOT BE COPIED OR REPRODUCED
WITHOUT AUTHORISATION FROM IP ENCLOSURES.
www.ipenclosures.com.au

| Itemref | Quantity | Title/Name, designation, material, dimension etc | | | Article No./Reference | |
|---|---|---|---|---|---|---|
| Designed by IP | | Checked by IP | Approved by - date 09/11/23 | Filename IP–10715062–0 | Date 09/11/23 | Scale 1:20 |

IP Enclosures

2x18RU (36RU) FIELD CABINET 1075Hx1500Wx620D DOUBLE BAY

IP–10715062–0 | Edition 1 | Sheet 1/1